CD-M600

AKAI SERVICE MANUAL

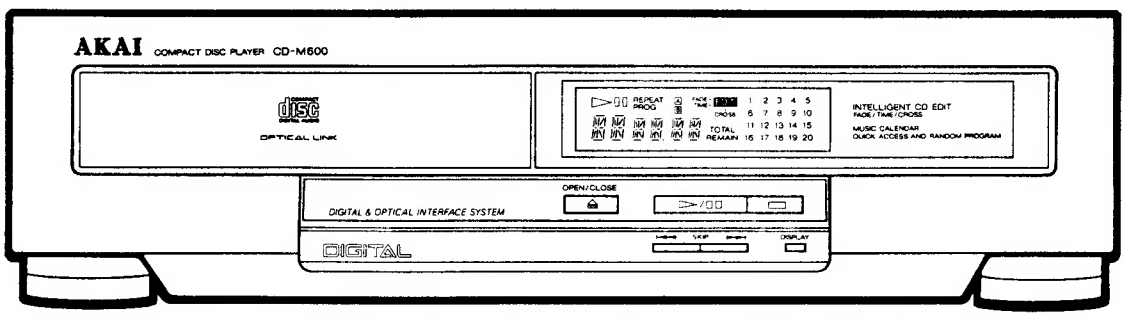

COMPACT disc DIGITAL AUDIO

COMPACT DISC PLAYER

MODEL CD-M600

SPECIFICATIONS

Pick up	3 beam laser pick up
Error correction system	Cross interleave reed solomon
Number of channels	2 channel stereo
Wow & flutter	Less than measurable limits
Optical output level	- 22 dBm / 660 nm
Power requirements	Supplied from amplifier (model AM-M600 / AM-M800)
Dimensions	360 (W) × 95 (H) × 295 (D) mm
Weight	3.5 kg

Standard accessories

Optical cable ..... ×1

* **For improvement purposes, specifications and design are subject to change without notice.**

★ SAFETY INSTRUCTIONS

PRECAUTIONS DURING SERVICING

1. Parts identified by the ⚠ (*) symbol are critical for safety. Replace only with parts number specified.
2. In addition to safety, other parts and assemblies are specified for conformance with such regulations as those applying to spurious radiation.
   These must also be replaced only with specified replacements.
   Examples: RF converters, tuner units, antenna selector switches, RF cables, noise blocking capacitors, noise blocking filters, etc.
3. Use specified internal wiring. Note especially:
   1) Wires covered with PVC tubing
   2) Double insulated wires
   3) High voltage leads
4. Use specified insulating materials for hazardous live parts. Note especially:
   1) Insulation Tape
   2) PVC tubing
   3) Spacers (Insulating Barriers)
   4) Insulation sheets for transistors
   5) Plastic screws for fixing microswitch (especially in turntable)
5. When replacing AC primary side components (transformers, power cords, noise blocking capacitors, etc.), wrap ends of wires securely about the terminals before soldering.

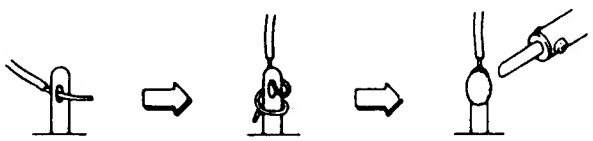

6. Observe that wires do not contact heat producing parts (heatsinks, oxide metal film resistors, fusible resistors, etc.).
7. Check that replaced wires do not contact sharp edged or pointed parts.
8. Also check areas surrounding repaired locations.
9. Use care that foreign objects (screws, solder droplets, etc.) do not remain inside the set.

PRECAUTIONS BEFORE/AFTER REPAIRING THE UNIT

[ABOUT THE POWER SUPPLY]

Power supply and power control data for the CD-M600 are supplied from the amplifier and tuner. Therefore when repair of the CD-M600 is necessary, repair should be made together with the amplifier and tuner.
To repair the CD-M600 without the tuner, use the following procedure, it can be repaier together with the amplifier only.

1) While pushing G.E REC button on the amplifier, press the POWER button on the amplifier to turn the power of the amplifier on.
2) While pushing the DISPLAY and ▶▶| buttons simultaneously on the CD-M600, connect the flat connection cable from the CD-M600 to the amplifier to turn the power of the CD-M600 on.

To turn off the power of the amplifier and CD-M600, the AC power cord must be disconnected.

[ABOUT THE TRANSPORT LOCKING PLUG]

This CD player has transport locking plugs located on the bottom panel. These plugs are locks the laser pick up mechanism to prevent vibration during transportation.
Before playback, make sure to remove the locking plugs.
Before transporting the unit, make sure to remove the compact disc, and insert the transport locking plugs to lock the laser pick up mechanism.

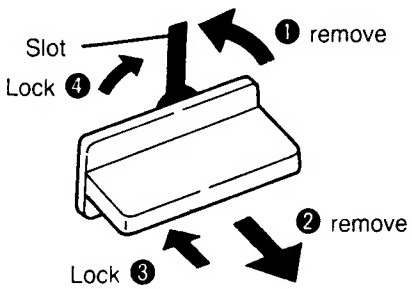

[PRECAUTIONS IN REPAIRING]

When repairing or adjusting the unit, please note the following points.

1. Do not put excessive pressure on the mechanical parts (operation parts), including the pick up block, as extremely high mechanical precision is required in these parts.
2. When the base is removed for repair or adjustment, make sure that there are no metal objects in the narrow gap between the P.C boards or the mecha. parts and the base.
3. The micro-computer and the CD signal processing ICs can be damaged by static electricity or leakage from a soldering iron during repair.
   While soldering, use a low leakaged (anti static) type soldering iron or take precautions against leakage as in the illustration below.

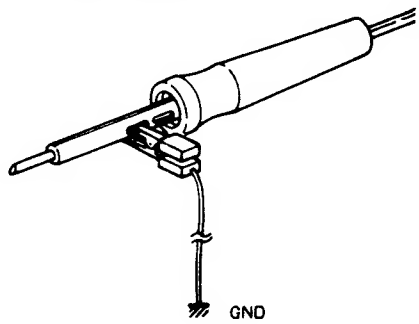

4. Do not loosen any screws in the pick up block.
   When handling the pick up block, please refer NOTE or CAUTION accompanying the explanation of procedure.
5. For your own safety, avoid hazardous invisible laser radiation. Do not look at the laser beam (objective lens) directly.
6. On models for some countries, laser warning labels are affixed on the outside and inside the unit as shown below.
   For your own safety, read these labels carefully when repairing or adjusting the unit.

[EUROPE, SCANDINAVIA, UK and AUSTRALIA]

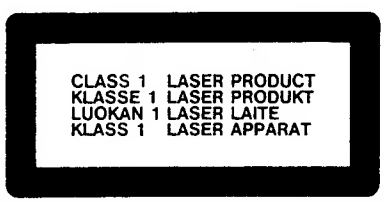

Label affixed on the rear panel of the unit

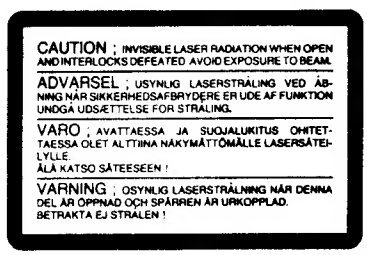

Label affixed on the disc clamper inside the unit

I. DISASSEMBLY

In case of trouble, etc., necessitating dismantling, please dismantle in the order shown in the illustrations.
Reassemble in reverse order.

2. Removal of the DISC TRAY

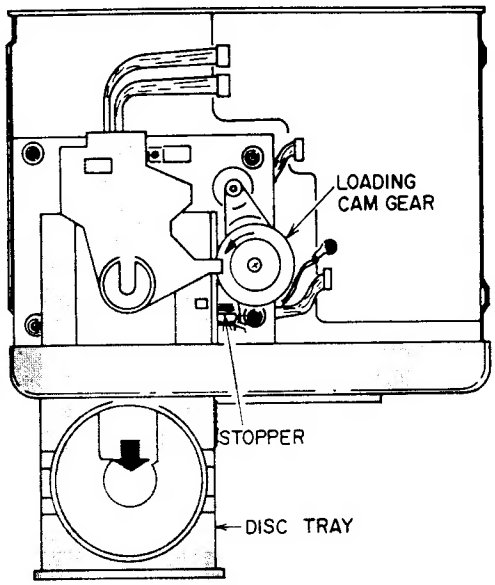

1) Set the DISC TRAY to EJECT position by turning the LOADING CAM GEAR counter-clockwise, then pull out the DISC TRAY while pushing the DISC TRAY STOPPER down.

1. Removal of the UPPER COVER

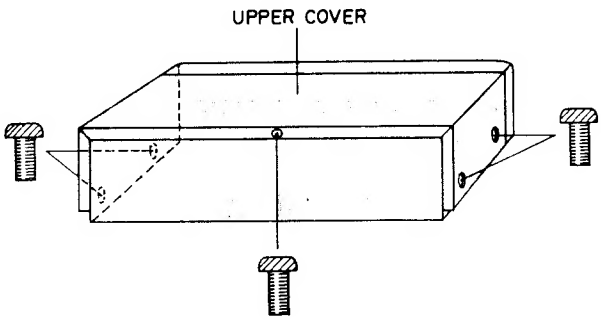

4. Removal of the MECHA BLOCK

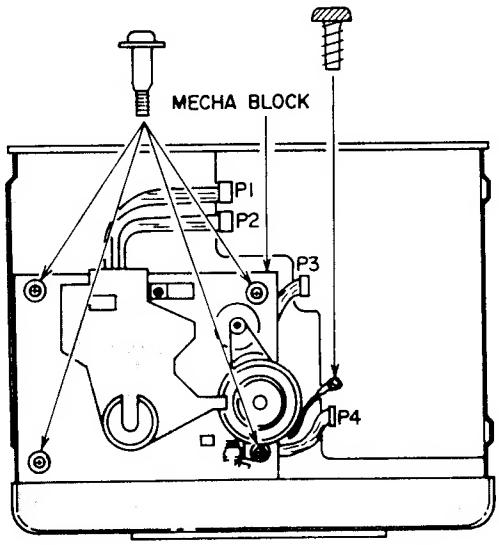

[NOTE]
Before disconnecting the connectors P1 and P2 to remove the MECHA. BLK, make sure that the P.C board on the PICK UP BLOCK has been short circuited (refer to 3-2. REPLACEMENT OF THE PICK UP BLOCK).

II. PRINCIPAL PARTS LOCATION

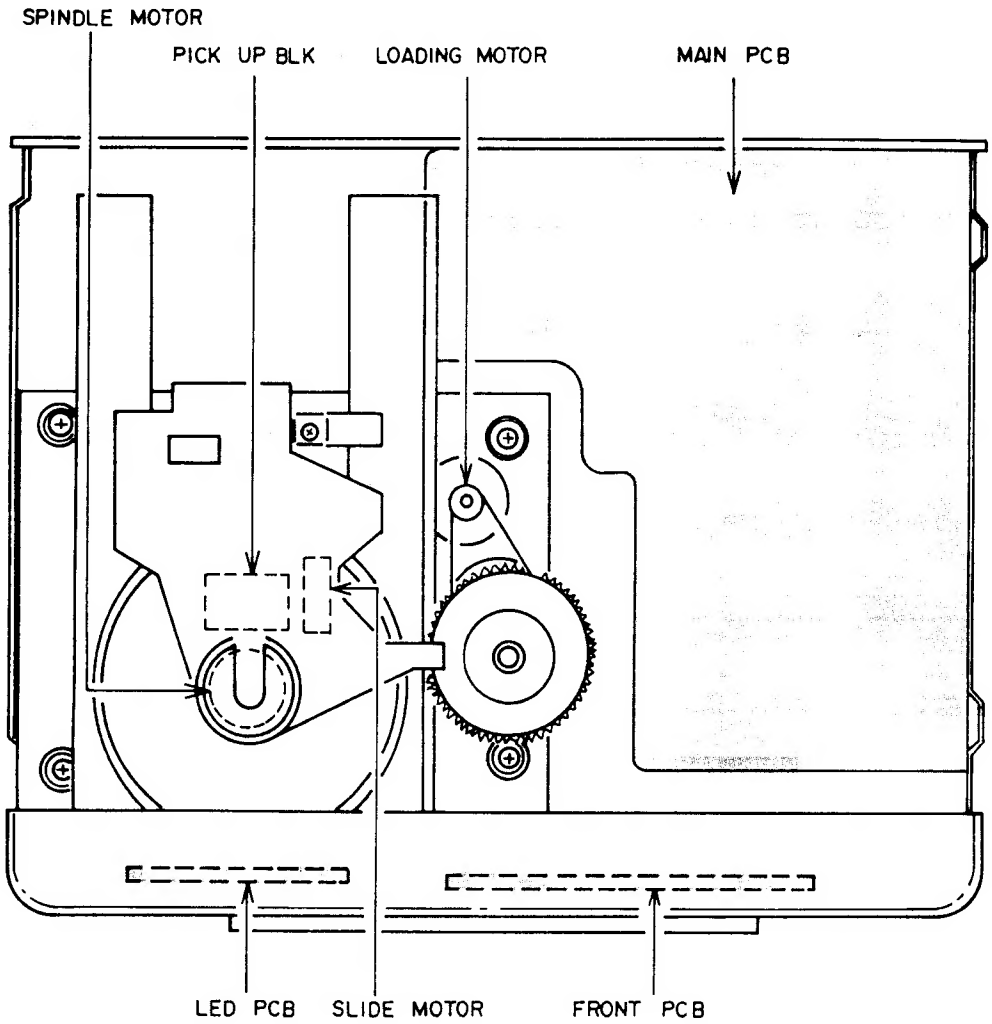

Fig. 2-1 Top view

III. REPLACEMENT OF THE PICK UP BLOCK AND MOTORS

NOTE: For your own safety, avoid hazardous invisible laser radiation. Make sure that the power switch is OFF when removing the DISC CLAMPER.

3-1. REMOVAL OF THE DISC CLAMPER

1) Remove the DISC CLAMPER by pulling it up and moving it to left.

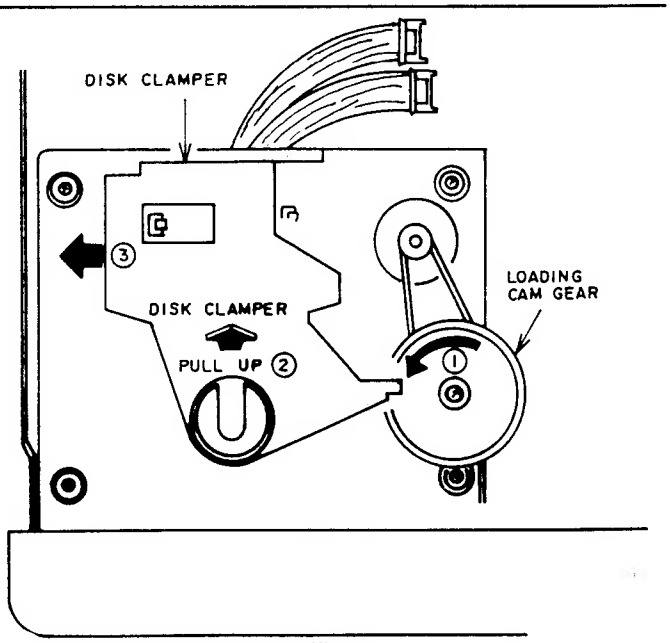

Fig. 3-1

3-2. REPLACEMENT OF THE PICK UP BLOCK

[PRECAUTION BEFORE REMOVING THE PICK UP BLOCK]

When disconnecting or connecting the connectors P1 and P2, make sure that the P.C board (on the PICK UP BLOCK) has been short circuited as shown in Fig. 3-2.

Do not turn the electricity "ON" while the P.C board is short circuited.

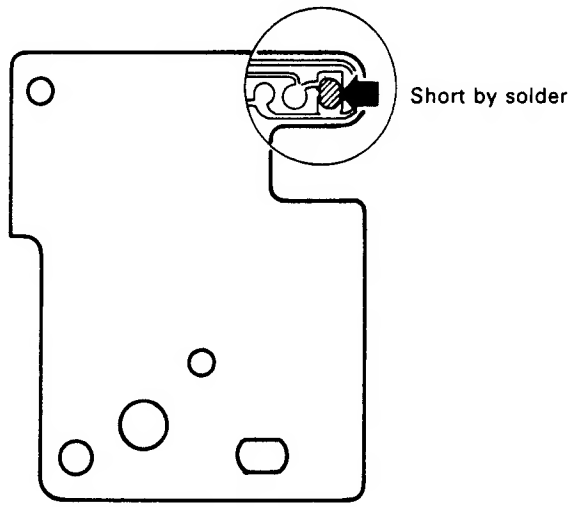

Fig. 3-2

1) Disconnect the connectors P1 and P2 on the PICK UP BLOCK.
2) Push the Ⓑ part of the pick up block SLIDE SHAFT and pull it in the arrowed direction to remove the PICK UP BLOCK.
3) Reassemble in reverse order.

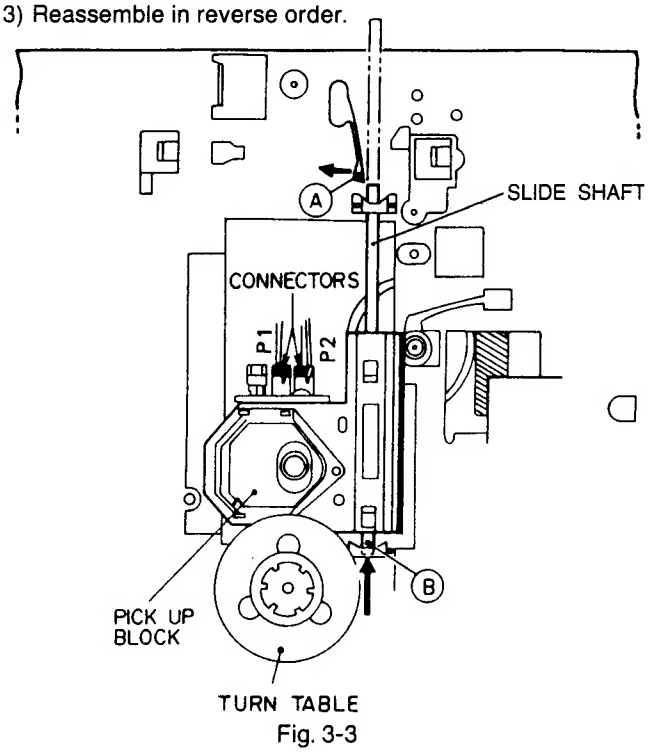

Fig. 3-3

3-3. REPLACEMENT OF THE SPINDLE MOTOR

1) Turn the Ⓐ GEAR HOLDER LEVER counter-clockwise (Fig. 3-4), then pull out the SLIDE GEAR.
2) Keep the PICK UP BLOCK away from the SPINDLE MOTOR (⬆ direction as shown in Fig. 3-5).
3) Remove the two SPINDLE MOTOR fixation screws through the hole on the TURN TABLE (Fig. 3-5), then remove the SPINDLE MOTOR.
4) Reassemble in reverse order.

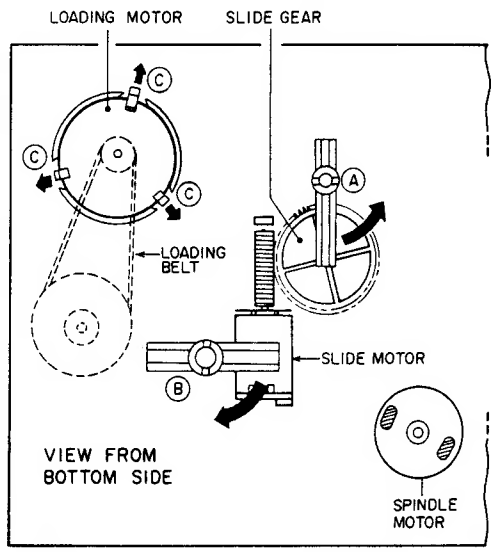

Fig. 3-4

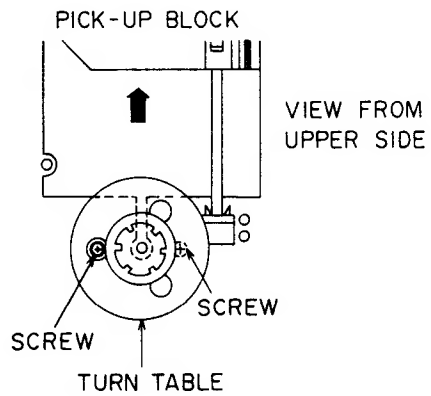

Fig. 3-5

3-4. REPLACEMENT OF THE LOADING MOTOR

1) Remove the LOADING BELT, then remove the LOADING MOTOR while releasing the © hooks (Fig. 3-4).
2) To reassemble, push in the LOADING MOTOR and replace the LOADING BELT.

3-5. REPLACEMENT OF THE SLIDE MOTOR

1) Turn the Ⓑ SLIDE MOTOR HOLD LEVER (Fig. 3-4) clockwise, then pull out the SLIDE MOTOR.
2) Reassemble in reverse order.

[ABOUT THE TEST MODE]

1) This test mode is used for adjustment or checking.
2) How to engage the TEST mode.
   While pushing the ⏮ and ⏭ buttons simultaneously on the front panel, connect the flat connection cable to the amplifier, .
3) Push the ⏏ button to advance the TEST mode number. When the TEST mode number is initialized, push the □ button.
4) Disconnect the flat connection cable from the amplifier to exit from the TEST mode.

STEP	ADJUSTMENT ITEM
1.	Test disc
2.	Mode or TEST mode number
3.	Test point and ADJ. part
4.	• Remarks *Result

Test Point Adjustment Part

TEST mode number and functions

TEST mode number	Functions
1	• Indicates that unit is engaged in the TEST mode.
12	• Indicates the end of FOCUS SEARCH.
123	• Engaged in the CLV-S mode. Tracking servo gain is set to the same setting as "JUMP" mode.
1234	• Tracking servo is on.
12345	• Unit is engaged in the normal play mode without anti shock function.
12345 6	• Unit is engaged in the normal play mode.
12345 67	• Tray is open
12345 678	• Tray is close

2 E-F BALANCE

1. Test disc 5A (AT-751330)
2. TEST mode 3
3. TP (TE), VR2
4. • Connect an **oscilloscope** to TP (TE).
   *A = B

4 FOCUS OFF-SET

1. Test disc 5A (AT-751330)
2. Test mode 1 and 2
3. TP (FE), VR5
4. • Connect a digital DC voltmeter to TP (FE) and check the voltage A in the test mode 2, then press STOP button and adjust VR5 so that the reading voltage B on the digital DC voltmeter is same as volttage A.
   *Voltage A = Voltage B

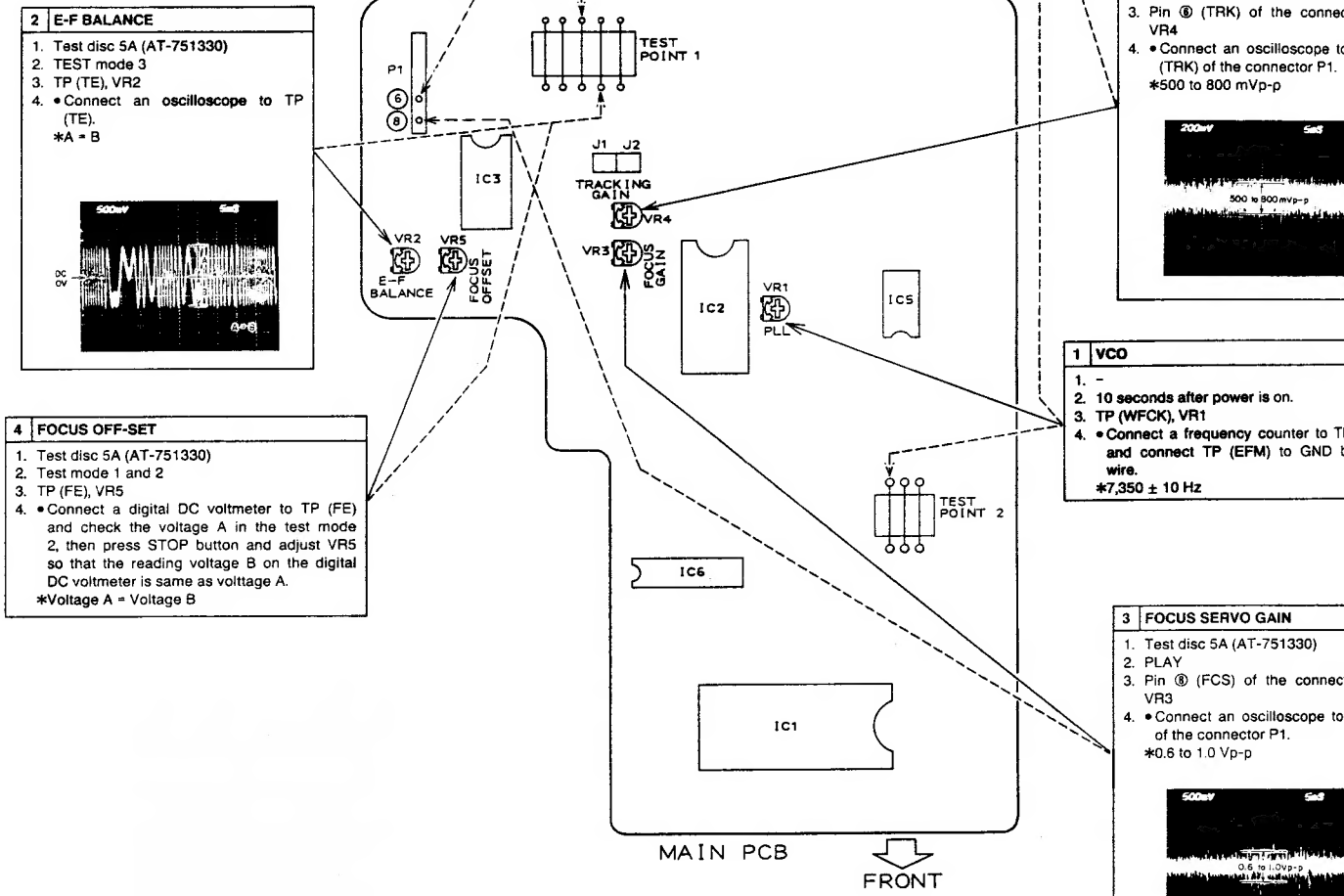

5 TRACKING SERVO GAIN

1. Test disc 5A (AT-751330)
2. PLAY
3. Pin ⑥ (TRK) of the connector P1, VR4
4. • Connect an oscilloscope to pin ⑥ (TRK) of the connector P1.
   *500 to 800 mVp-p

1 VCO

1. –
2. **10 seconds after power is on.**
3. **TP (WFCK), VR1**
4. • **Connect a frequency counter to TP (WFCK) and connect TP (EFM) to GND by jumper wire.**
   ***7,350 ± 10 Hz**

3 FOCUS SERVO GAIN

1. Test disc 5A (AT-751330)
2. PLAY
3. Pin ⑧ (FCS) of the connector P1, VR3
4. • Connect an oscilloscope to pin ⑧ of the connector P1.
   *0.6 to 1.0 Vp-p

V. PARTS LIST

ATTENTION

1. When placing an order for parts, be sure to list Part No., Model No. and the description of eachpart. Otherwise, the non-delivery of the part or the delivery of a wrong part may result.
2. Please make sure that Part No. is correct when ordering. If not, a part different from the one you ordered may be delivered.
3. Since the parts shown in Parts List of Preliminary Service Manual may have been the subject of changes, please use this Parts List for all future reference.

HOW TO USE THIS PARTS LIST

1. This Parts List lists those parts which are considered necessary for repairs. Other common parts, such as resistors and capacitors, are listed in the "Common List for Service Parts" from which these parts should be selected and stocked.
2. The Recommended Spare Parts List shows those parts in the Parts List which are considered particularly important for service.
3. Parts not shown in the Parts List and "Common List for Service Parts" will not in principle be supplied.
4. How to read the Parts List.

a) Mechanism Block

2. HEAD BASE BLOCK

Ref.No.	Part No.	Description
1	BH-T2023A320A	HEAD BASE BLOCK
2	HP-H2206A010A	HEAD R/P PR4-8FU C
3	ZS-477876	PAN20×03STL CMT
4	ZS-536488	BID20×08STL CMT
5	ZG-402895	SP CS ANGLE ADJUST

SP (Service Parts) Classification

This number corresponds with the individual parts index number in that figure.

b) PC Board

6. MAIN PC BOARD

Ref.No.	Part No.	Description
IC1	EI-324536	IC HD14049BP
IC2	EI-336801	IC MB8841-564M
C1A	EC-338399	C MMY V 223M 250AC [U,E,B,S]
C1B	EC-350949	C MMY V 223M 250DC [J]
C1C	EC-338397	C MMY V 223M 125AC [C,A]
X1	EI-318384	OSC X'TAL NC-18C

Symbols for primary destination

[A] : AAL (U.S.A) [S] : SAA (Australia)
[B] : BEAB (England) [U] : U/T (Universa Area)
[C] : CSA (Canada)
[E] : CEE (Europe) [V] : VDE (W. Germany)
[J] : JPN (Janan) [Y] : Custom Version

SP (Service Parts) Classification

These reference symbols correspond with component symbols in the Schematic Diagrams.

The available PC Board Blocks are listed separately.

5. When Part No. is known, Parts Index at end of Parts List can be used to locate where that part is shown in Parts List by its Reference No.listed at right of Part No.

WARNING

⚠ (*) INDICATES SAFETY CRITICAL COMPONENTS. FOR CONTINUED SAFETY, REPLACE SAFETY CRITICAL COMPONENTS ONLY WITH MANUFACTURE'S RECOMMENDED PARTS.

AVERTISSEMENT

⚠ (*) IL INDIQUE LES COMPOSANTS CRITIQUES DE SÉCURITÉ. POUR MAINTENIR LE DEGRÉ DE SÉCURITÉDE L'APPAREIL, NE REMPLACER QUE DES PIÉCES RECOMMANDEES PAR LÉ FABRICANT.

1.RECOMMENDED SPARE PARTS

We suggest you to stock the following Recommended Spare Part items listed below since they can cover most of the routine service.

Ref.No.	Part No.	Description
1	BM-B328441	SC MOTOR LOADING PART
2	BM-B371552	SC MOTOR SLIDE PART
3	BM-B372237	SC MOTOR SPINDLE PART
4	*BO-394728J	PICK UP KSS-210A
5	ED-394416J	D LED SLV-31VT3F RED
6	ED-307572	D SILICON H 1SS131
7	*ED-389840J	D SILICON 1SR139-100HS F10
8	ED-397071J	D ZENER H HZS6B3 T26
9	ED-387783J	D ZENER H HZS6C3L F05
10	ED-387820J	D ZENER H HZS9A2L F05
11	EI-389264J	IC BA6209N
12	EI-390112J	IC CXA1081S
13	EI-390120J	IC CXA1082BS
14	EI-388090J	IC CXD1125Q
15	EI-382251J	IC LC3517BS-15
16	EI-394933J	IC UPD75212A FXCD2 200
17	EI-390149J	OSC CE CST4.23MGW 4.230MHZ
18	EI-381139J	OSC X'TAL HC-49/U 16934.400KHZ
19	EM-389466J	IND FL FIP8CYM7 CHARACTER
20	ES-368603	SW LEAF MSW-1585
21	ES-393376J	SW LEAF SPPB22 01-1
22	ES-394818J	SW TACT SOR-123HS T05
23	ET-360399	TR DTC114TS
24	ET-354371	TR DTC124ES
25	ET-373392	TR DTC124XS
26	ET-353899	TR 2SA1317 S,T,U
27	ET-394555J	TR 2SA1515 Q,R
28	ET-394495J	TR 2SA934 Q,R
29	ET-394919J	TR 2SB1329 Q,R T05
30	ET-394494J	TR 2SC2060 Q,R F05
31	ET-397160J	TR 2SC3330 R,S,T,U,V
32	ET-394554J	TR 2SD1379
33	ET-394917J	TR 2SD2005 Q,R T05
34	ET-394916J	TR 2SD2037 E,F T05
35	EW-394419J	WIRE ASSY P2059 12P
36	MB-368590J1	BELT LOADING

2. CD MECHANISM

Ref.No.	Part No.	Description
1	MA-380689J	CHASSIS MECHA OUTSERT PART
2	*BO-394728J	PICK UP KSS-210A
5	MS-368348	SHAFT
6	BM-B372237	SC MOTOR SPINDLE PART
7	ZS-367463	PAN20X025STL CMT
8	MB-368350	CUSHION RUBBER
9	BM-B328441	SC MOTOR LOADING PART
10	MZ-368349	GEAR WORM WHEEL
11	BM-B371552	SC MOTOR SLIDE PART
12	ES-368603	SW LEAF MSW-1585
13	ES-393376J	SW LEAF SPPB22 01-1
14	ZS-536488	BID20X08STL CMT
15	ZS-343082	PT BR26X08STL CMT
16	MR-374137J1	PULLEY GEAR
17	MB-368590J1	BELT LOADING
18	MZ-388217J	CAM GEAR LOADING
19	ZS-365391	PT BR30X08STL CMT C080
20	MZ-368347	CLAMPER
21	SZ-374136J1	HOLDER CLAMPER
22	ZG-368591J1	SP PUSH CLAMP
23	SC-382692J3	DISK TRAY S PART
24	MZ-382686J1	HOLDER DISC S-(R)
25	MZ-382687J1	HOLDER DISC S-(L)
26	ZG-368592	SP PULL DISK HOLD
27	MB-377975	STOPPER RUBBER
30	MZ-378828J	ANGLE TRAY
31	ZS-432843	PAN26X04STL CMT

NOTE:
Parts will not be supplied if they are not listed in the parts list, even if they appear on the assembling illustrations with reference No.

CD MECHANISM

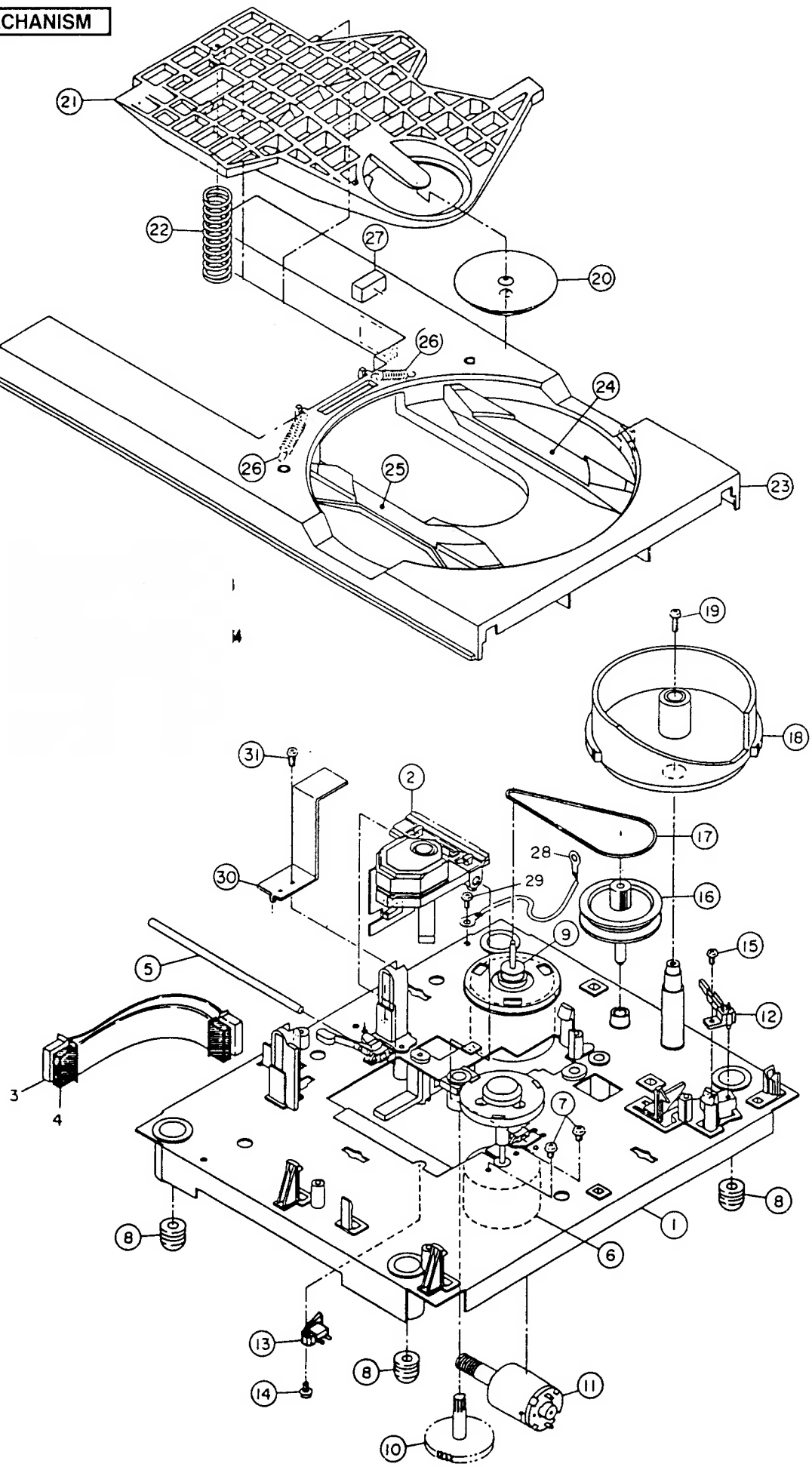

3. P.C BOARD

Ref.No.	Part No.	Description
1	BA-P2059A020A	PC(#) MAIN BLK CD-M600

PC (#) MAIN BLK CONSISTS OF FOLLOWING P.C BOARD.
- MAIN P.C BOARD
- FRONT P.C BOARD
- LED P.C BOARD

4. MAIN P.C BOARD

Ref.No.	Part No.	Description
D1	*ED-389840J	D SILICON 1SR139-100HS F10
D2	*ED-389840J	D SILICON 1SR139-100HS F10
D3	*ED-389840J	D SILICON 1SR139-100HS F10
D4	*ED-389840J	D SILICON 1SR139-100HS F10
D5	ED-387783J	D ZENER H HZS6C3L F05
D6	ED-387783J	D ZENER H HZS6C3L F05
D7	ED-397071J	D ZENER H HZS6B3 T26
D8	ED-387820J	D ZENER H HZS9A2L F05
D9	ED-307572	D SILICON H 1SS131
D10	ED-307572	D SILICON H 1SS131
D13	ED-307572	D SILICON H 1SS131
D14	ED-387783J	D ZENER H HZS6C3L F05
IC1	EI-394933J	IC UPD75212A FXCD2 200
IC2	EI-390120J	IC CXA1082BS
IC3	EI-390112J	IC CXA1081S
IC4	EI-388090J	IC CXD1125Q
IC5	EI-382251J	IC LC3517BS-15
IC6	EI-389264J	IC BA6209N
J4	EJ-394490J	SOCKET OPTICAL GP1F32T
R50	ER-382474J	R OMF H S10 FS 1/2W 1R2J
TR1	ET-394554J	TR 2SD1379
TR2	ET-394555J	TR 2SA1515 Q,R
TR4	ET-353899	TR 2SA1317 S,T,U
TR8	ET-353899	TR 2SA1317 S,T,U
TR9	ET-397160J	TR 2SC3330 R,S,T,U,V
TR10	ET-394916J	TR 2SD2037 E,F T05
TR11	ET-394495J	TR 2SA934 Q,R
TR12	ET-394916J	TR 2SD2037 E,F T05
TR13	ET-394919J	TR 2SB1329 Q,R T05
TR14	ET-394494J	TR 2SC2060 Q,R F05
TR15	ET-394495J	TR 2SA934 Q,R
TR16	ET-394917J	TR 2SD2005 Q,R T05
TR17	ET-394919J	TR 2SB1329 Q,R T05
TR18	ET-397160J	TR 2SC3330 R,S,T,U,V
TR19	ET-397160J	TR 2SC3330 R,S,T,U,V
TR20	ET-397160J	TR 2SC3330 R,S,T,U,V
TR21	ET-397160J	TR 2SC3330 R,S,T,U,V
TR22	ET-373392	TR DTC124XS
TR23	ET-373392	TR DTC124XS
TR24	ET-354371	TR DTC124ES
TR25	ET-360399	TR DTC114TS
TR26	ET-360399	TR DTC114TS
TR27	ET-360399	TR DTC114TS
TR28	ET-373392	TR DTC124XS
TR29	ET-373392	TR DTC124XS
TR30	ET-373392	TR DTC124XS
TR31	ET-373392	TR DTC124XS
VR1	EV-393741J	R S-FIX H T05 RH064JC 0.3W 102
VR2	EV-390872J1	R S-FIX H T05 RH0638C 0.1W 223
VR3	EV-390872J1	R S-FIX H T05 RH0638C 0.1W 223
VR4	EV-390872J1	R S-FIX H T05 RH0638C 0.1W 223
VR5	EV-390873J1	R S-FIX H T05 RH0638C 0.1W 472
X1	EI-381139J	OSC X"TAL HC-49/U 16934.400KHZ
X2	EI-390149J	OSC CE CST4.23MGW 4.230MHZ

5. FRONT P.C BOARD

Ref.No.	Part No.	Description
D101	ED-307572	D SILICON H 1SS131
D102	ED-307572	D SILICON H 1SS131
D103	ED-307572	D SILICON H 1SS131
IN1	EM-389466J	IND FL FIP8CYM7 CHARACTER
SW1	ES-394818J	SW TACT SOR-123HS T05
SW2	ES-394818J	SW TACT SOR-123HS T05
SW3	ES-394818J	SW TACT SOR-123HS T05
SW4	ES-394818J	SW TACT SOR-123HS T05
SW5	ES-394818J	SW TACT SOR-123HS T05
SW6	ES-394818J	SW TACT SOR-123HS T05

6. LED P.C BOARD

Ref.No.	Part No.	Description
D201	ED-394416J	D LED SLV-31VT3F RED
D202	ED-394416J	D LED SLV-31VT3F RED
D203	ED-394416J	D LED SLV-31VT3F RED
D204	ED-394416J	D LED SLV-31VT3F RED

7. FINAL ASSEMBLY

Ref.No.	Part No.	Description
1	SP-394112M	PANEL FRONT
2	SA-394136M	CUSHION FOOT
3	SE-394190M	PLATE FOOT
4	ZW-394496J	CANOE CLIP NO.74
5	SE-394138M	FILTER FLD(CD)
6	SE-394128M	WINDOW AT/CD
7	SE-394188M	DECORATION PLATE CENTER CD
8	SK-394120M	BUTTON OPERATION
9	SA-394127M	FOOT REAR
10-A	SP-394126M	PANEL REAR CD-M600(U)
10-B	SP-394366M	PANEL REAR CD-M600(E)
11	EW-394419J	WIRE ASSY P2059 12P
12	SE-394119M	LENS OPTICAL
13	SE-394121M	REFLECTOR OPTICAL
14	SP-394117M	PANEL TRAY
15	SZ-394118M	WINDOW TRAY
16	SP-394096M	COVER UPPER AT
17	ZS-387983J	ST BID30X08STL BNI EARTH LOCK
18	ZS-331182	BT BID30X08STL BNI
19	ZS-394114M	SCREW GRADUATED
20	ZS-378163	SCREW GRADUATED

NOTE:
Parts will not be supplied if they are not listed in the parts list, even if they appear on the assembling illustrations with reference No.

8. ACCESSARY

Ref.No.	Part No.	Description
1	AX-385911J	CORD P2187-60A

FINAL ASSEMBLY

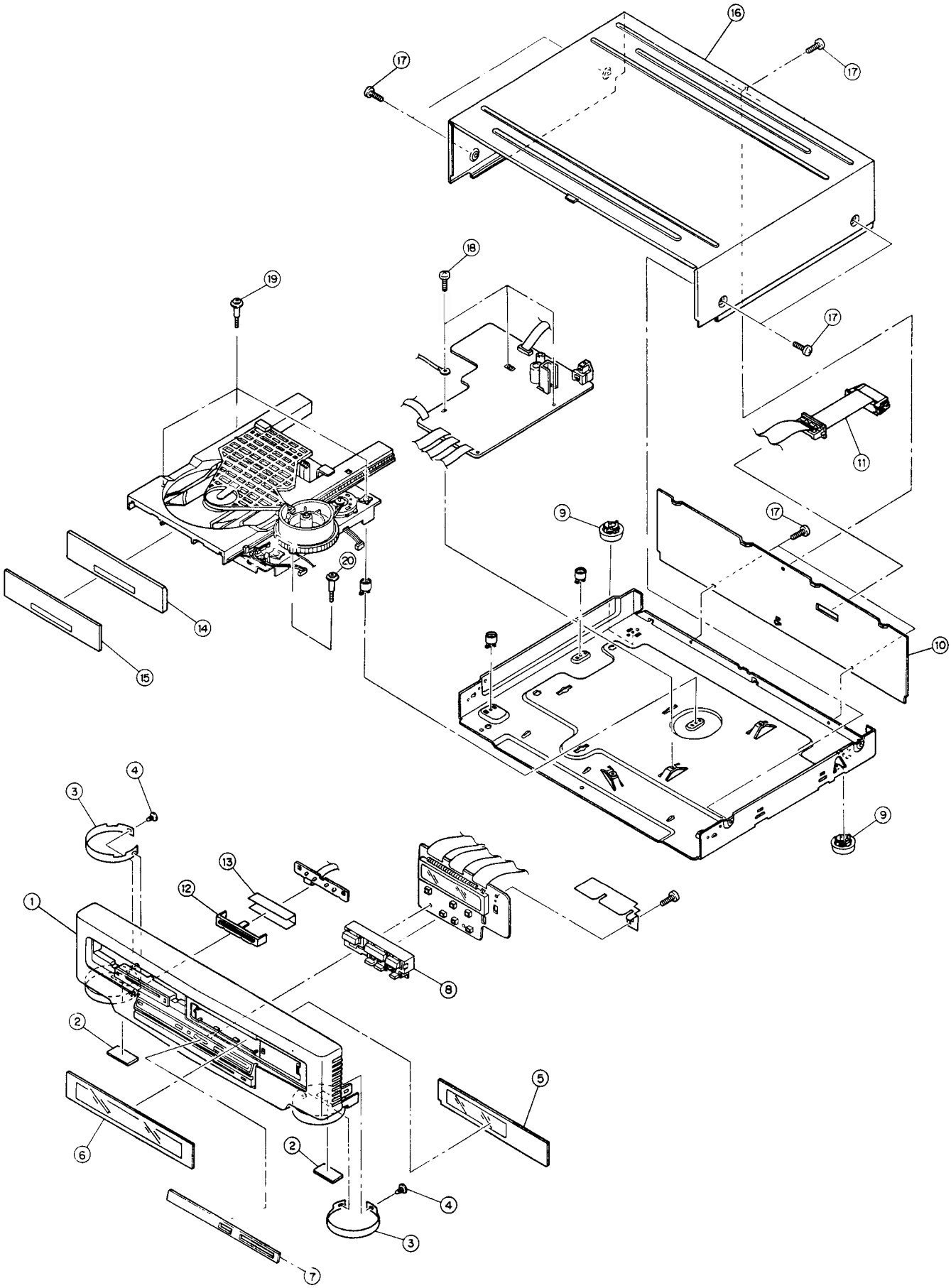

AKAI

MODEL CD-M600

SCHEMATIC DIAGRAMS
AND PC BOARDS

TABLE OF CONTENTS

1. BLOCK DIAGRAM 3
2. SCHEMATIC DIAGRAM 4
3. MAIN AND OTHER PC BOARDS 5
4. INFORMATION OF ICs 6

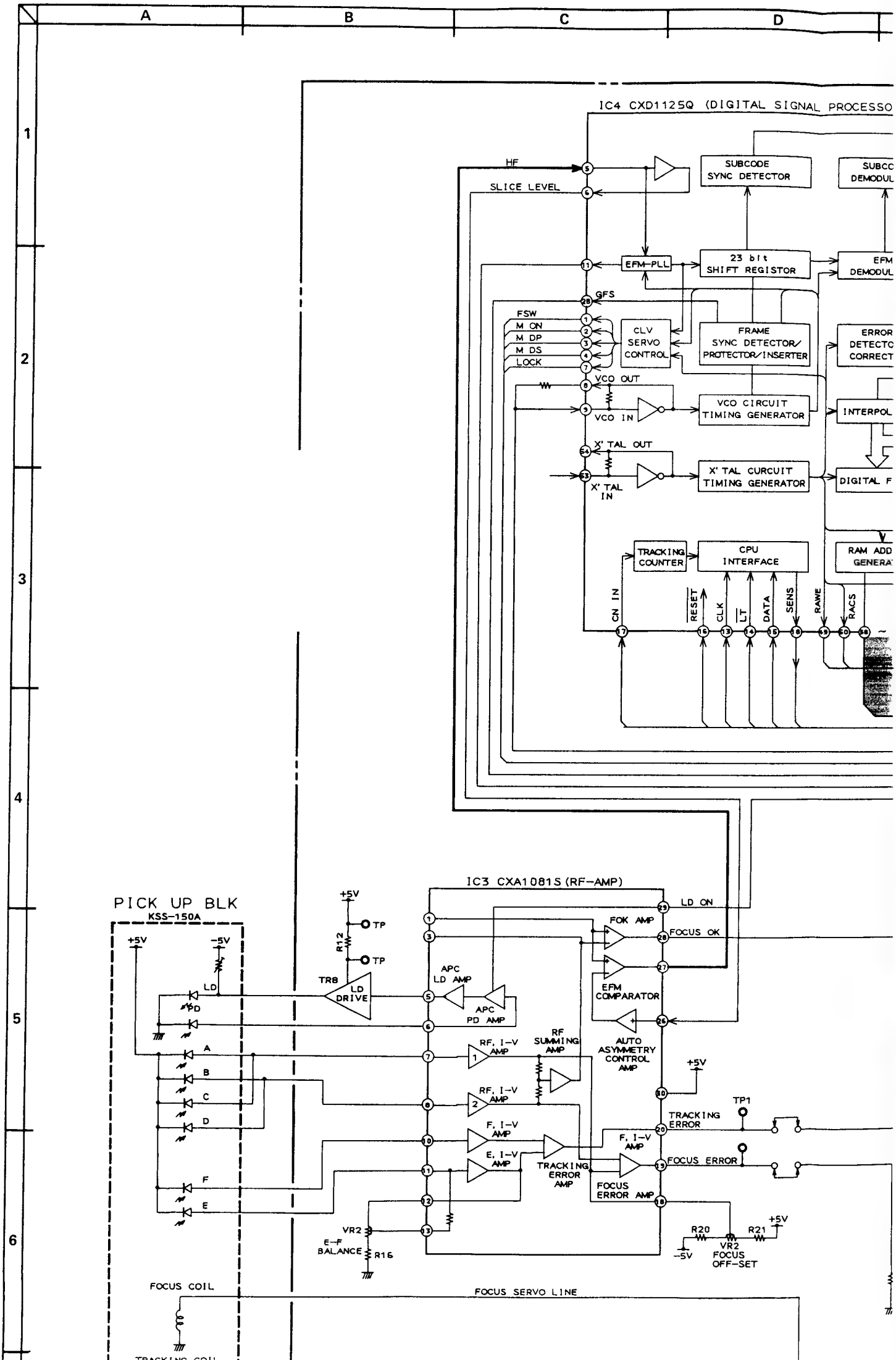
A
B
C
D
1
2
3
4
5
6
IC4 CXD1125Q (DIGITAL SIGNAL PROCESSO
HF
SLICE LEVEL
SUBCODE SYNC DETECTOR
SUBCC DEMODUL
EFM-PLL
23 bit SHIFT REGISTOR
EFM DEMODUL
GFS
FSW
M ON
M DP
M DS
LOCK
CLV SERVO CONTROL
FRAME SYNC DETECTOR/ PROTECTOR/INSERTER
ERROR DETECTC CORRECT
VCO OUT
VCO IN
VCO CIRCUIT TIMING GENERATOR
INTERPOL
X' TAL OUT
X' TAL IN
X' TAL CURCUIT TIMING GENERATOR
DIGITAL F
TRACKING COUNTER
CPU INTERFACE
RAM ADD GENERA
CN IN
RESET
CLK
LT
DATA
SENS
RAWE
RACS
IC3 CXA1081S (RF-AMP)
PICK UP BLK
KSS-150A
+5V
-5V
TP
R12
TR8
LD DRIVE
LD
PD
A
B
C
D
E
F
APC LD AMP
APC PD AMP
RF, I-V AMP
RF SUMMING AMP
F, I-V AMP
E, I-V AMP
TRACKING ERROR AMP
FOCUS ERROR AMP
FOK AMP
EFM COMPARATOR
AUTO ASYMMETRY CONTROL AMP
LD ON
FOCUS OK
TRACKING ERROR
FOCUS ERROR
TP1
VR2
E-F BALANCE
R16
R20
R21
VR2 FOCUS OFF-SET
FOCUS COIL
FOCUS SERVO LINE

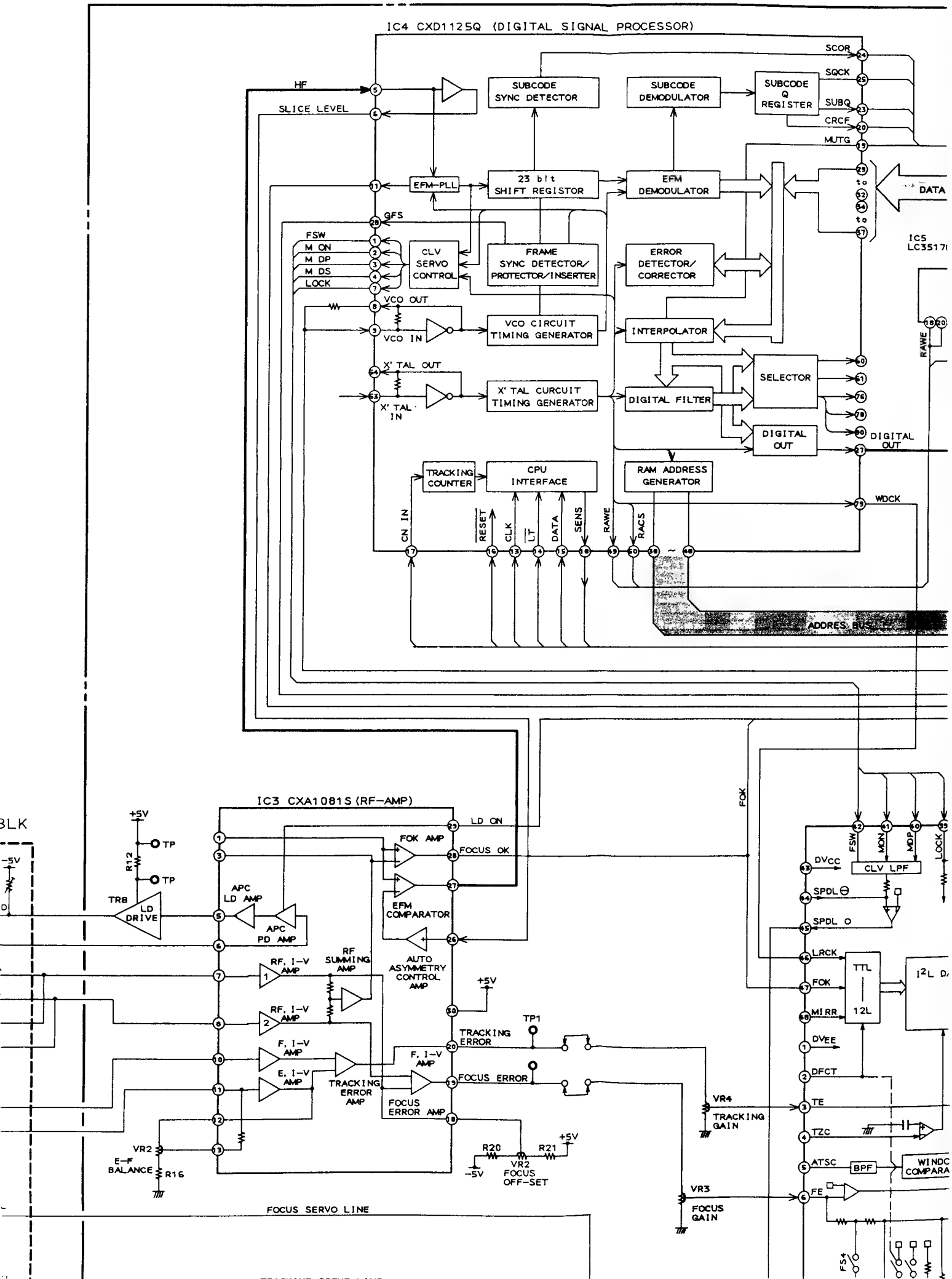
IC4 CXD1125Q (DIGITAL SIGNAL PROCESSOR)
HF
SLICE LEVEL
SUBCODE SYNC DETECTOR
SUBCODE DEMODULATOR
SUBCODE Q REGISTER
SCOR
SQCK
SUBQ
CRCF
MUTG
EFM-PLL
23 bit SHIFT REGISTOR
EFM DEMODULATOR
DATA
GFS
FSW
M_ON
M_DP
M_DS
LOCK
CLV SERVO CONTROL
FRAME SYNC DETECTOR/ PROTECTOR/INSERTER
ERROR DETECTOR/ CORRECTOR
VCO OUT
VCO IN
VCO CIRCUIT TIMING GENERATOR
INTERPOLATOR
X' TAL OUT
X' TAL IN
X' TAL CURCUIT TIMING GENERATOR
DIGITAL FILTER
SELECTOR
DIGITAL OUT
TRACKING COUNTER
CPU INTERFACE
RAM ADDRESS GENERATOR
WDCK
CN IN
RESET
CLK
LT
DATA
SENS
RAWE
RACS
ADDRES BUS
IC3 CXA1081S (RF-AMP)
+5V
TP
R12
TR8
LD DRIVE
APC LD AMP
APC PD AMP
LD ON
FOK AMP
FOCUS OK
EFM COMPARATOR
AUTO ASYMMETRY CONTROL AMP
RF SUMMING AMP
RF, I-V AMP
F, I-V AMP
E, I-V AMP
TRACKING ERROR AMP
FOCUS ERROR AMP
TRACKING ERROR
FOCUS ERROR
TP1
VR2
E-F BALANCE
R16
R20
R21
VR2
FOCUS OFF-SET
-5V
VR4
TRACKING GAIN
VR3
FOCUS GAIN
FOCUS SERVO LINE
FOK
FSW
MON
MDP
LOCK
CLV LPF
DVCC
SPDL
LRCK
TTL 12L
MIRR
DVEE
DFCT
TE
TZC
ATSC
BPF
FE
FS4

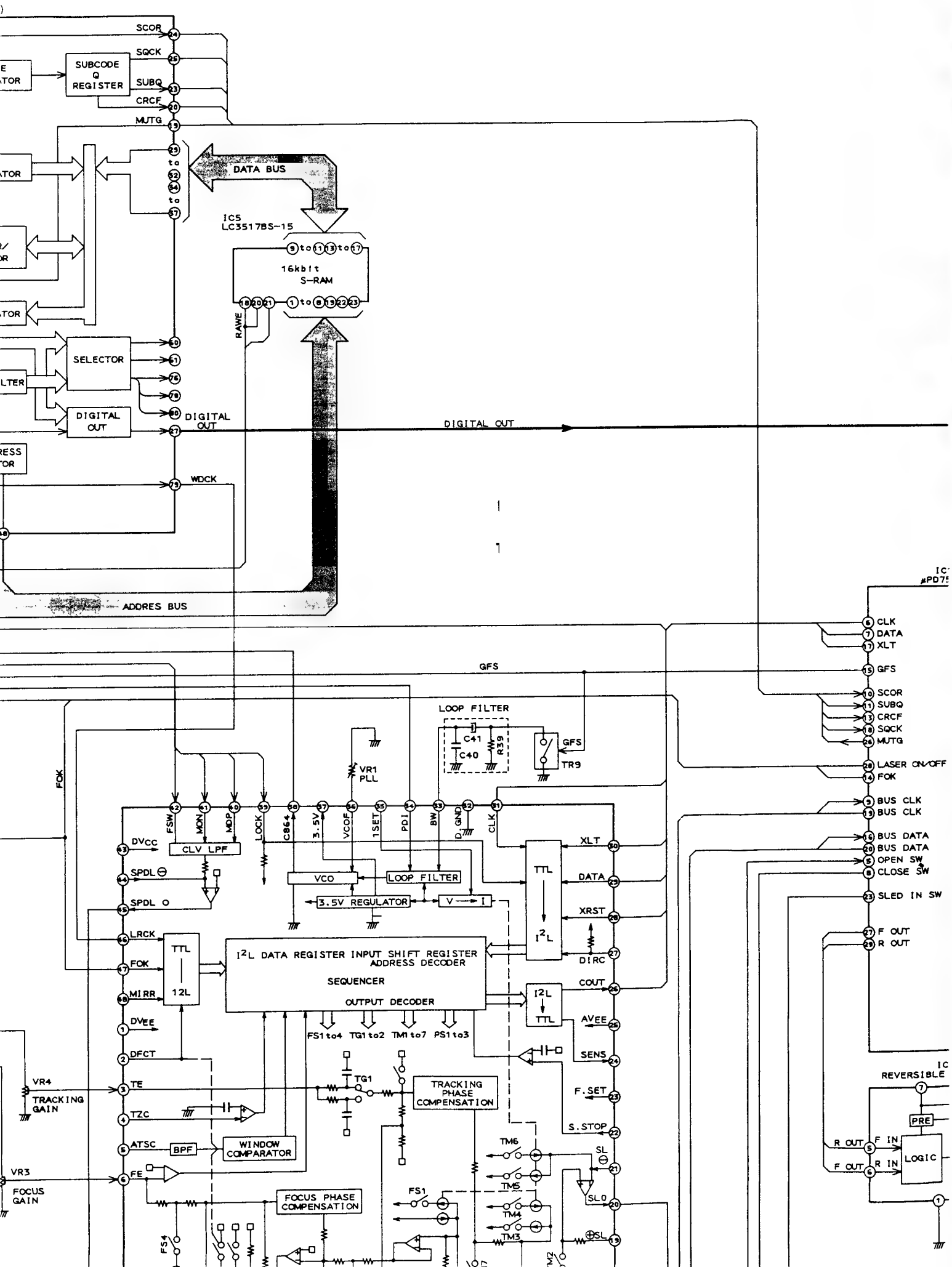
SCOR
SQCK
SUBQ
CRCF
MUTG
SUBCODE Q REGISTER
DATA BUS
IC5 LC3517BS-15
16kbit S-RAM
RAWE
SELECTOR
DIGITAL OUT
DIGITAL OUT
WDCK
ADDRES BUS
GFS
LOOP FILTER
C41
C40
R39
GFS
TR9
VR1 PLL
FOK
FSW
MON
MDP
LOCK
C864
3.5V
VCOF
1SET
PDI
BW
GND
CLK
DVCC
CLV LPF
SPDL
SPDL
VCO
LOOP FILTER
3.5V REGULATOR
V → I
TTL
I²L
XLT
DATA
XRST
DIRC
COUT
AVEE
SENS
F.SET
S.STOP
LRCK
FOK
MIRR
TTL
12L
I²L DATA REGISTER INPUT SHIFT REGISTER
ADDRESS DECODER
SEQUENCER
OUTPUT DECODER
I2L
TTL
FS1 to4 TG1 to2 TM1 to7 PS1 to3
DVEE
DFCT
TE
TZC
ATSC
BPF
WINDOW COMPARATOR
FE
VR4
TRACKING GAIN
VR3
FOCUS GAIN
TG1
TRACKING PHASE COMPENSATION
FOCUS PHASE COMPENSATION
FS1
FS4
TM6
TM5
TM4
TM3
SL
SLO
IC µPD75
CLK
DATA
XLT
GFS
SCOR
SUBQ
CRCF
SQCK
MUTG
LASER ON/OFF
FOK
BUS CLK
BUS CLK
BUS DATA
BUS DATA
OPEN SW
CLOSE SW
SLED IN SW
F OUT
R OUT
IC REVERSIBLE
PRE
R OUT
F IN
F OUT
R IN
LOGIC

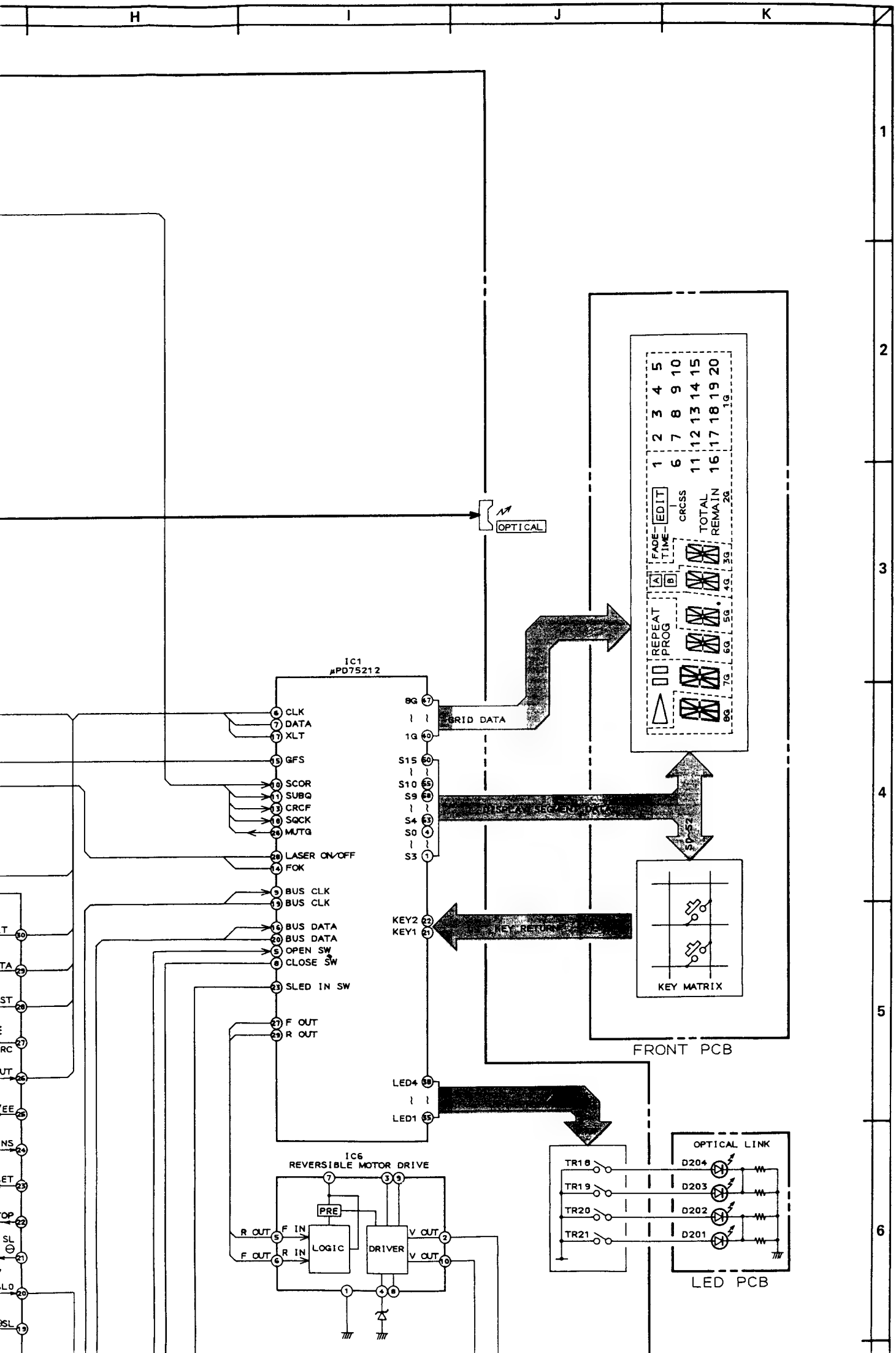
H
I
J
K
1
2
3
4
5
6
OPTICAL
IC1
μPD75212
CLK
DATA
XLT
GFS
SCOR
SUBQ
CRCF
SQCK
MUTG
LASER ON/OFF
FOK
BUS CLK
BUS CLK
BUS DATA
BUS DATA
OPEN SW
CLOSE SW
SLED IN SW
F OUT
R OUT
BG
1G
S15
S10
S9
S4
S0
S3
GRID DATA
KEY2
KEY1
KEY RETURN
LED4
LED1
REPEAT
PROG
FADE-TIME
A
B
EDIT
CRCSS
TOTAL REMAIN
KEY MATRIX
FRONT PCB
IC6
REVERSIBLE MOTOR DRIVE
PRE
R OUT
F IN
F OUT
R IN
LOGIC
DRIVER
V OUT
V OUT
TR18
TR19
TR20
TR21
OPTICAL LINK
D204
D203
D202
D201
LED PCB

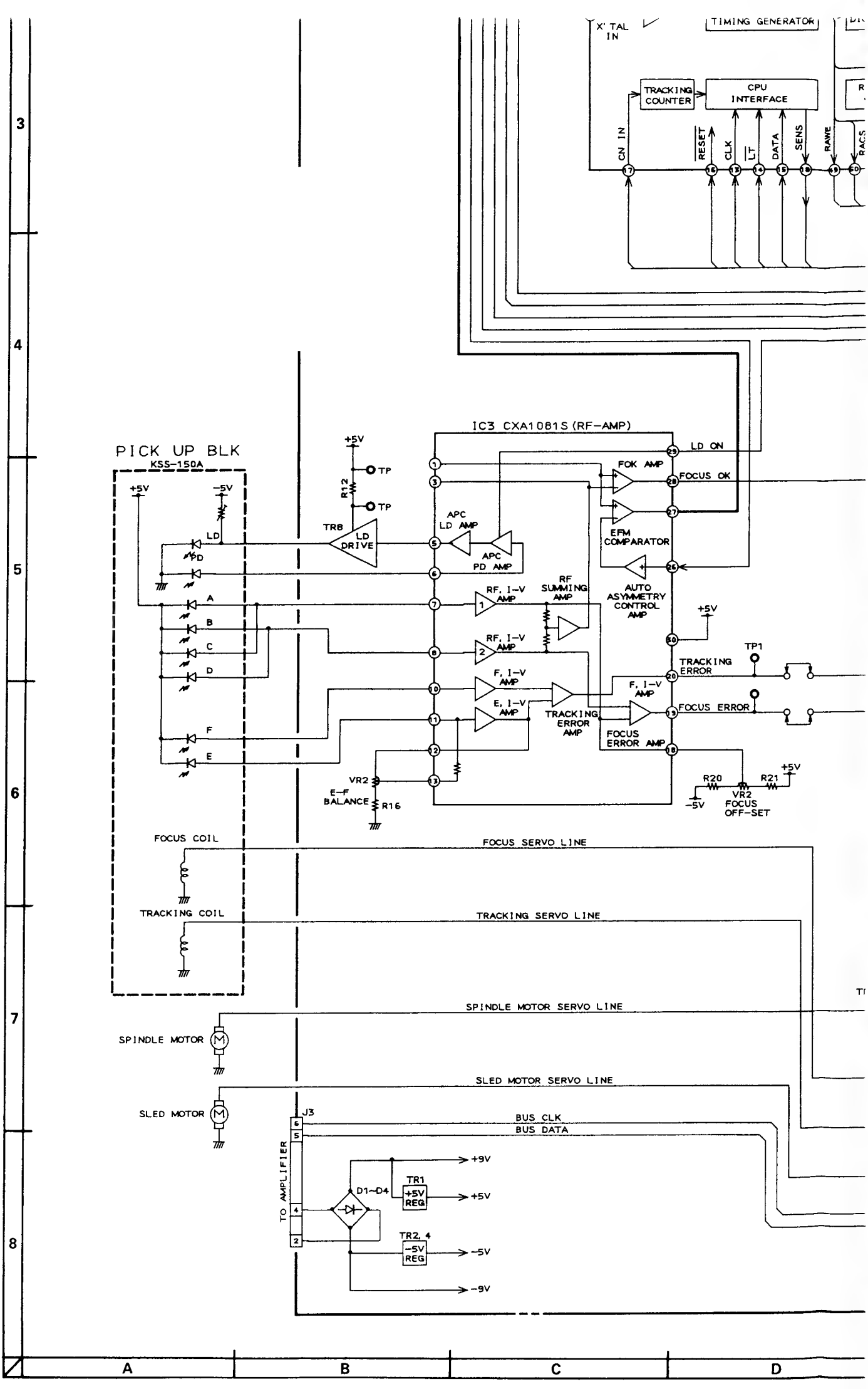
X' TAL IN
TIMING GENERATOR
TRACKING COUNTER
CPU INTERFACE
CN IN
RESET
CLK
LT
DATA
SENS
RAWE
RACS
IC3 CXA1081S (RF-AMP)
PICK UP BLK
KSS-150A
+5V
-5V
LD
PD
A
B
C
D
F
E
TP
R12
TR8
LD DRIVE
APC LD AMP
APC PD AMP
RF, I-V AMP
RF SUMMING AMP
F, I-V AMP
E, I-V AMP
TRACKING ERROR AMP
FOCUS ERROR AMP
FOK AMP
EFM COMPARATOR
AUTO ASYMMETRY CONTROL AMP
LD ON
FOCUS OK
TRACKING ERROR
FOCUS ERROR
TP1
VR2
E-F BALANCE
R16
R20
R21
VR2 FOCUS OFF-SET
FOCUS COIL
TRACKING COIL
FOCUS SERVO LINE
TRACKING SERVO LINE
SPINDLE MOTOR SERVO LINE
SPINDLE MOTOR
SLED MOTOR SERVO LINE
SLED MOTOR
J3
BUS CLK
BUS DATA
TO AMPLIFIER
D1~D4
TR1
+5V REG
TR2, 4
-5V REG
+9V
-9V

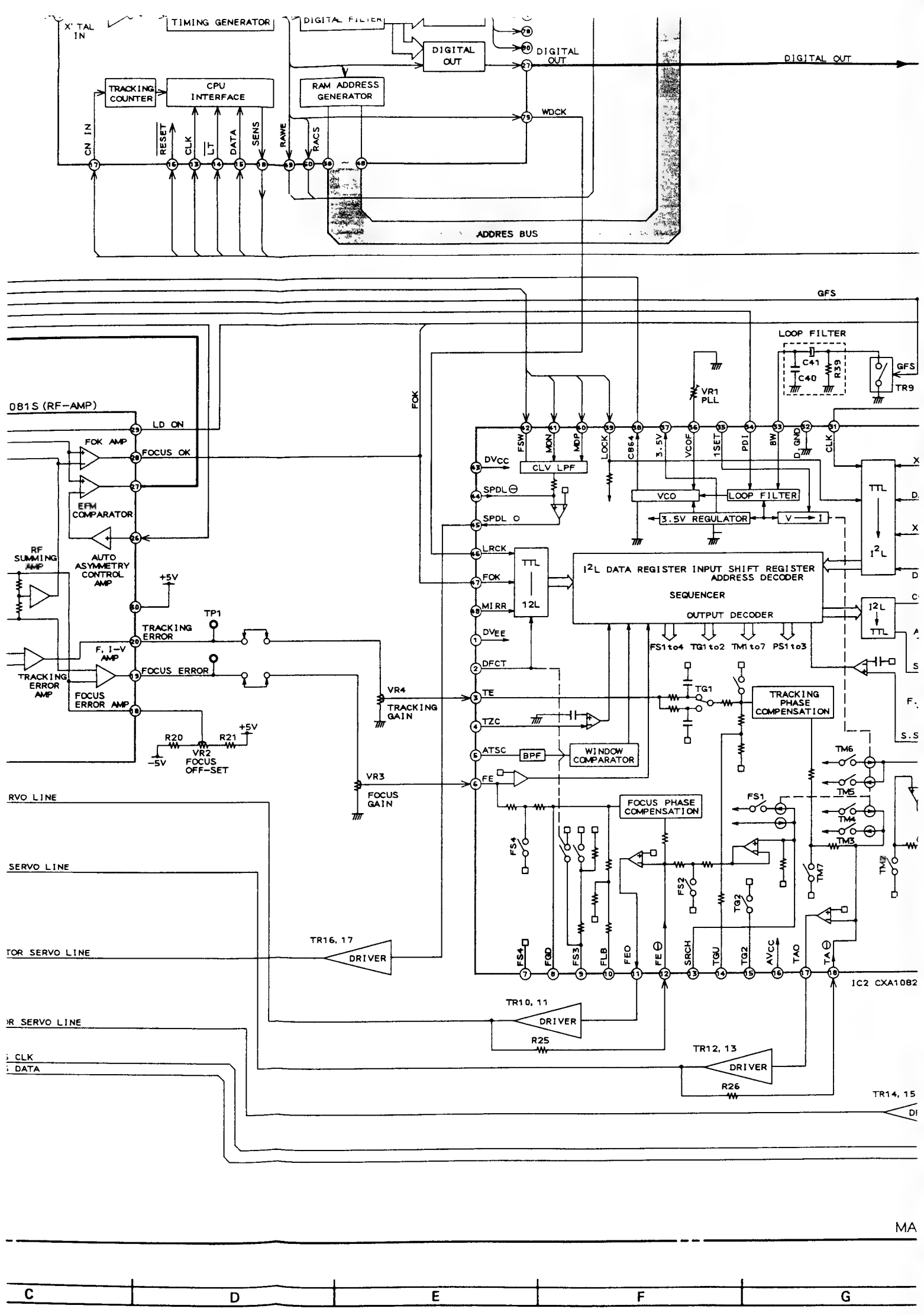
X' TAL IN
TIMING GENERATOR
DIGITAL FILTER
DIGITAL OUT
DIGITAL OUT
DIGITAL OUT
TRACKING COUNTER
CPU INTERFACE
RAM ADDRESS GENERATOR
WDCK
CN IN
RESET
CLK
LT
DATA
SENS
RAWE
RACS
ADDRES BUS
GFS
LOOP FILTER
C41
C40
R39
GFS
TR9
VR1 PLL
FOK
081S (RF-AMP)
LD ON
FOK AMP
FOCUS OK
EFM COMPARATOR
RF SUMMING AMP
AUTO ASYMMETRY CONTROL AMP
+5V
TP1
TRACKING ERROR
F, I-V AMP
FOCUS ERROR
TRACKING ERROR AMP
FOCUS ERROR AMP
R20
VR2 FOCUS OFF-SET
R21
+5V
-5V
VR4
TRACKING GAIN
VR3
FOCUS GAIN
FSW
MON
MDP
LOCK
C864
3.5V
VCOF
1SET
PDI
BW
GND
CLK
DVCC
CLV LPF
SPDL⊖
SPDL ○
VCO
LOOP FILTER
3.5V REGULATOR
V → I
TTL
I²L
LRCK
FOK
MIRR
TTL
12L
I²L DATA REGISTER INPUT SHIFT REGISTER
ADDRESS DECODER
SEQUENCER
OUTPUT DECODER
FS1to4 TG1to2 TM1to7 PS1to3
I2L
TTL
DVEE
DFCT
TE
TZC
ATSC
BPF
WINDOW COMPARATOR
FE
TG1
TRACKING PHASE COMPENSATION
TM6
TM5
TM4
TM3
TM7
TM2
FS1
FOCUS PHASE COMPENSATION
FS4
FS2
TG2
RVO LINE
SERVO LINE
TOR SERVO LINE
TR16, 17
DRIVER
FS4
FOD
FS3
FLB
FEO
FE⊖
SRCH
TGU
TG2
AVCC
TAO
TA⊖
IC2 CXA1082
TR10, 11
DRIVER
R25
R SERVO LINE
CLK
DATA
TR12, 13
DRIVER
R26
TR14, 15

MA

C | D | E | F | G

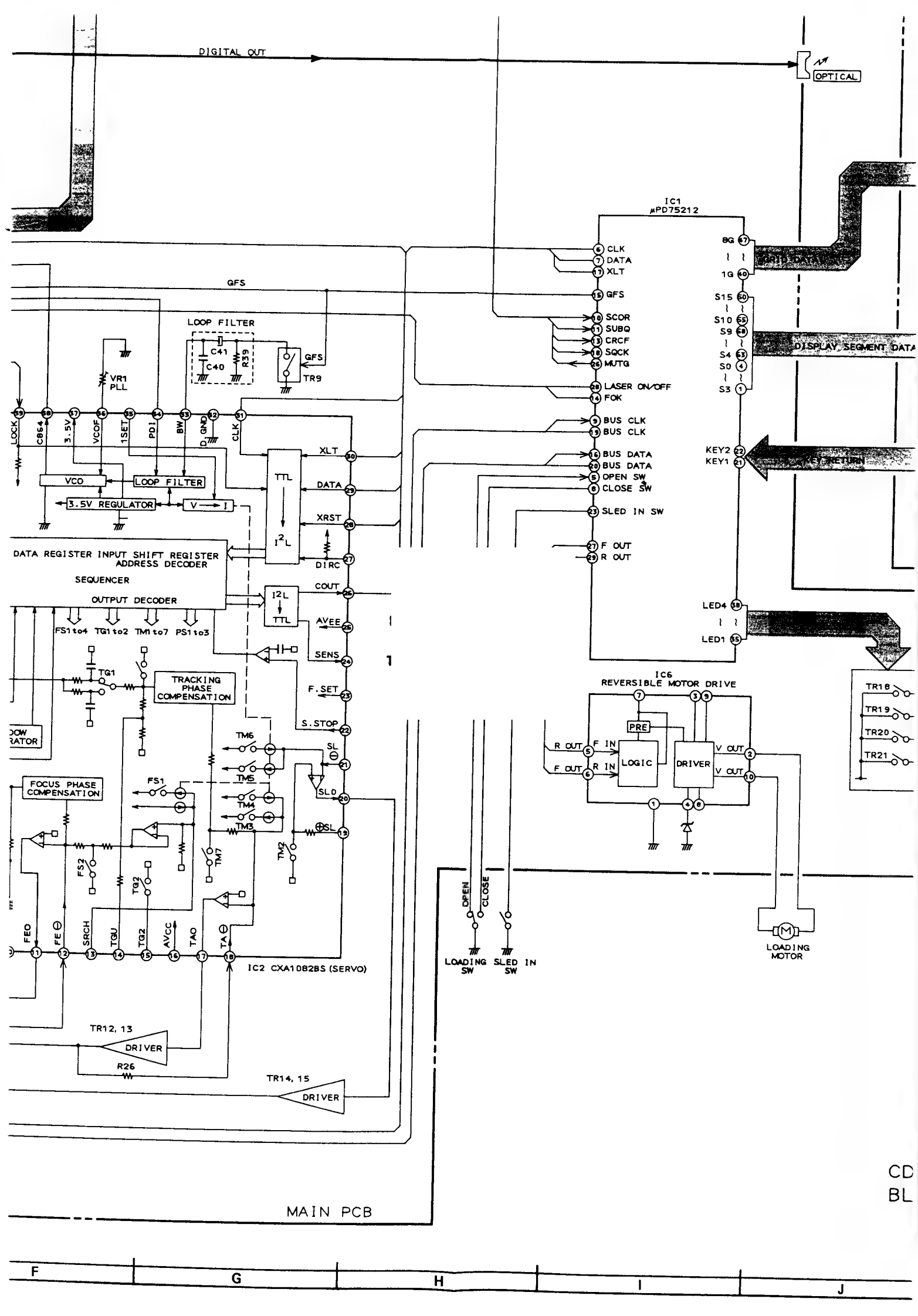
DIGITAL OUT
OPTICAL
IC1
μPD75212
CLK
DATA
XLT
GFS
SCOR
SUBQ
CRCF
SQCK
MUTG
LASER ON/OFF
FOK
BUS CLK
BUS CLK
BUS DATA
BUS DATA
OPEN SW
CLOSE SW
SLED IN SW
F OUT
R OUT
BG
1G
S15
S10
S9
S4
S0
S3
KEY2
KEY1
LED4
LED1
LOOP FILTER
C41
C40
R39
GFS
TR9
VR1
PLL
LOCK
C864
3.5V
VCOF
1SET
PDI
BW
GND
CLK
VCO
LOOP FILTER
3.5V REGULATOR
V → I
TTL
I²L
XLT
DATA
XRST
DIRC
COUT
AVEE
SENS
F.SET
S.STOP
SL
SL0
DATA REGISTER INPUT SHIFT REGISTER
ADDRESS DECODER
SEQUENCER
OUTPUT DECODER
FS1to4 TG1to2 TM1to7 PS1to3
I2L
TTL
TG1
TRACKING
PHASE
COMPENSATION
FOCUS PHASE
COMPENSATION
FS1
FS2
TG2
TM1
TM2
TM3
TM4
TM5
TM6
TM7
SL
SL0
FED
FE
SRCH
TGU
TG2
AVCC
TAO
TA
IC2 CXA1082BS (SERVO)
TR12, 13
DRIVER
R26
TR14, 15
DRIVER
IC6
REVERSIBLE MOTOR DRIVE
PRE
R OUT
F OUT
F IN
R IN
LOGIC
DRIVER
V OUT
V OUT
OPEN
CLOSE
LOADING SW
SLED IN SW
LOADING MOTOR
TR18
TR19
TR20
TR21
MAIN PCB
CD
BL
F
G
H
I
J

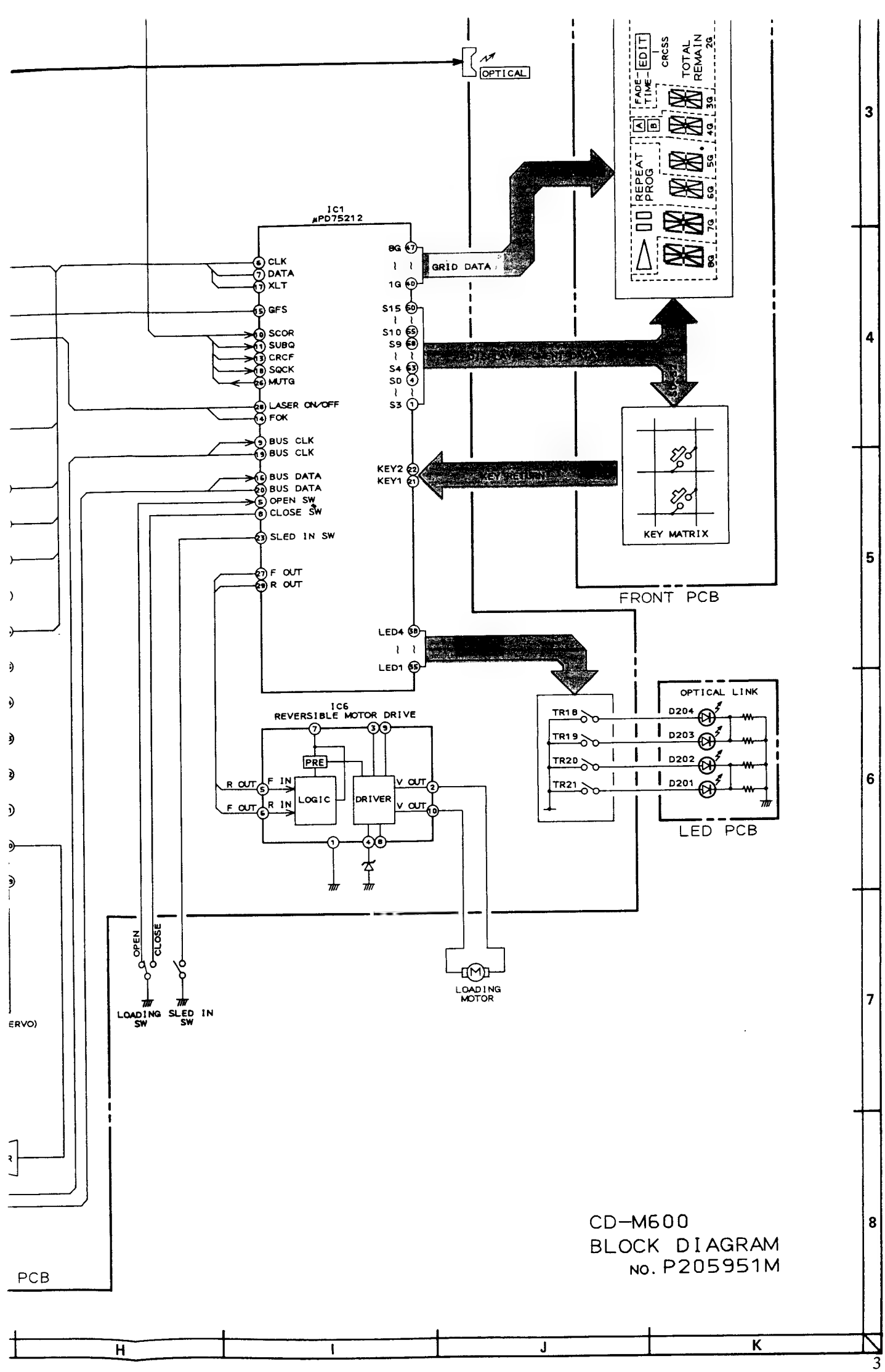

CD-M600
BLOCK DIAGRAM
No. P205951M

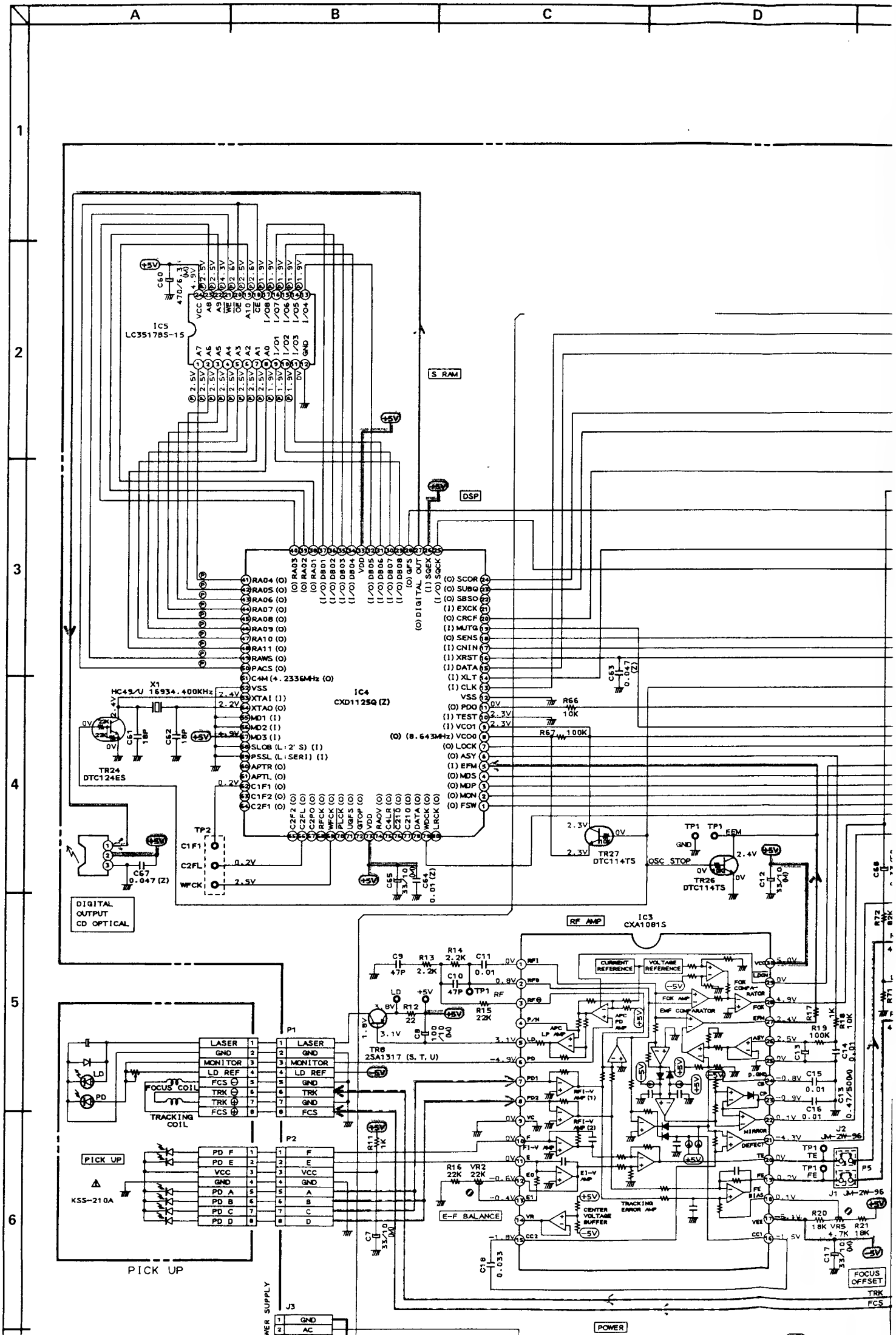
A
B
C
D
1
2
3
4
5
6
S RAM
DSP
IC5
LC35178S-15
IC4
CXD1125Q (Z)
X1
HC49/U 16934.400KHz
TR24
DTC124ES
TR27
DTC114TS
TR26
DTC114TS
OSC STOP
DIGITAL
OUTPUT
CD OPTICAL
RF AMP
IC3
CXA1081S
TR8
2SA1317 (S, T, U)
P1
P2
LASER
GND
MONITOR
LD REF
FCS
TRK
PD
LD
FOCUS COIL
TRACKING
COIL
PICK UP
KSS-210A
E-F BALANCE
CENTER
VOLTAGE
BUFFER
TRACKING
ERROR AMP
FE
BIAS
DEFECT
MIRROR
FOCUS
OFFSET
TRK
FCS
POWER
J1 JM-2W-96
J2 JM-2W-96
J3
P5

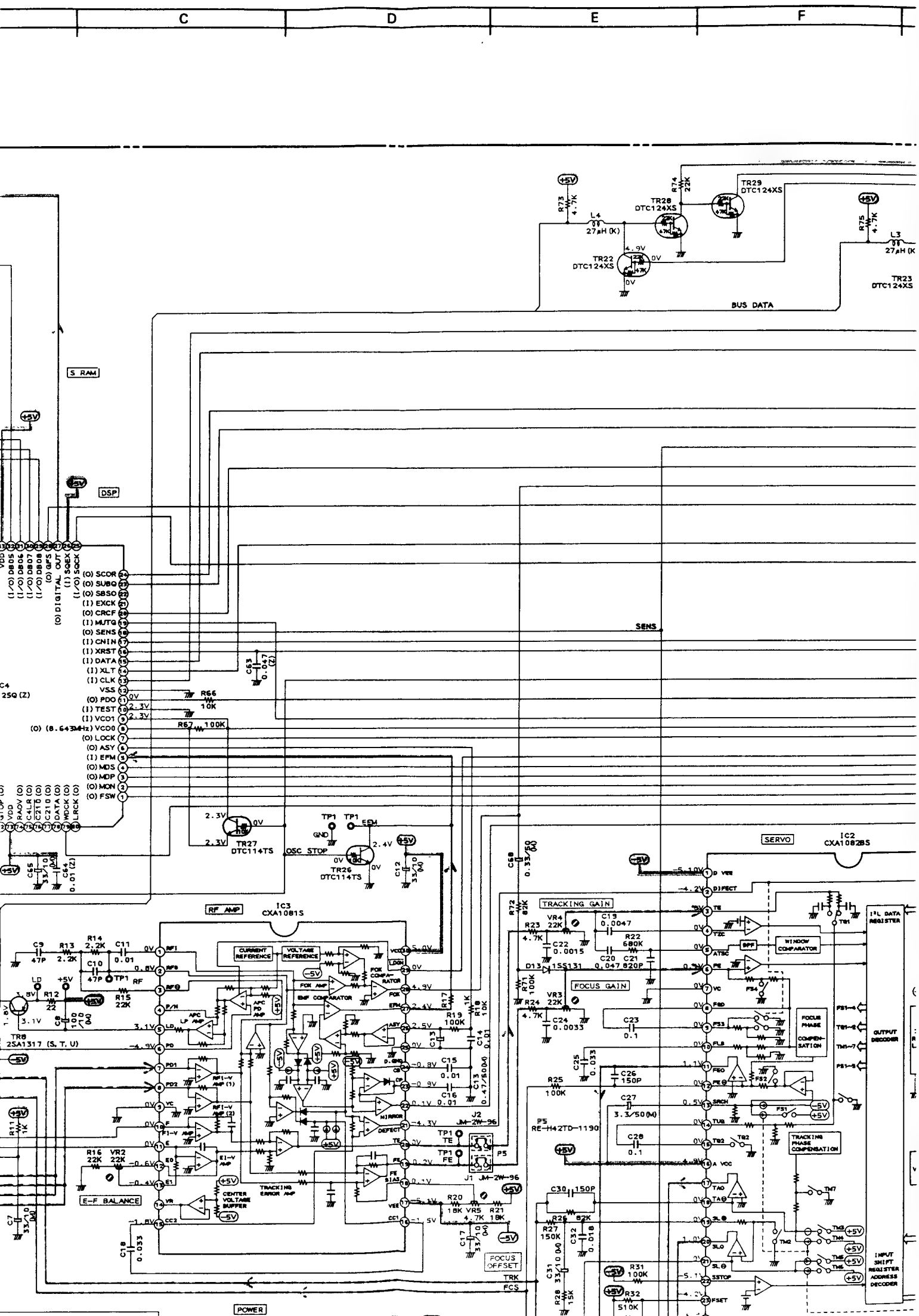
C
D
E
F
TR29
DTC124XS
TR28
DTC124XS
TR22
DTC124XS
TR23
DTC124XS
BUS DATA
S RAM
DSP
SENS
TR27
DTC114TS
TR26
DTC114TS
OSC STOP
SERVO
IC2
CXA1082BS
RF AMP
IC3
CXA1081S
TRACKING GAIN
FOCUS GAIN
WINDOW COMPARATOR
FOCUS PHASE COMPENSATION
TRACKING PHASE COMPENSATION
OUTPUT DECODER
INPUT SHIFT REGISTER ADDRESS DECODER
E-F BALANCE
CENTER VOLTAGE BUFFER
TRACKING ERROR AMP
FOCUS OFFSET
POWER
TR8
2SA1317 (S, T, U)
P5
RE-H42TD-1190
J1 JM-2W-96
J2 JM-2W-96

E | F | G | H | I

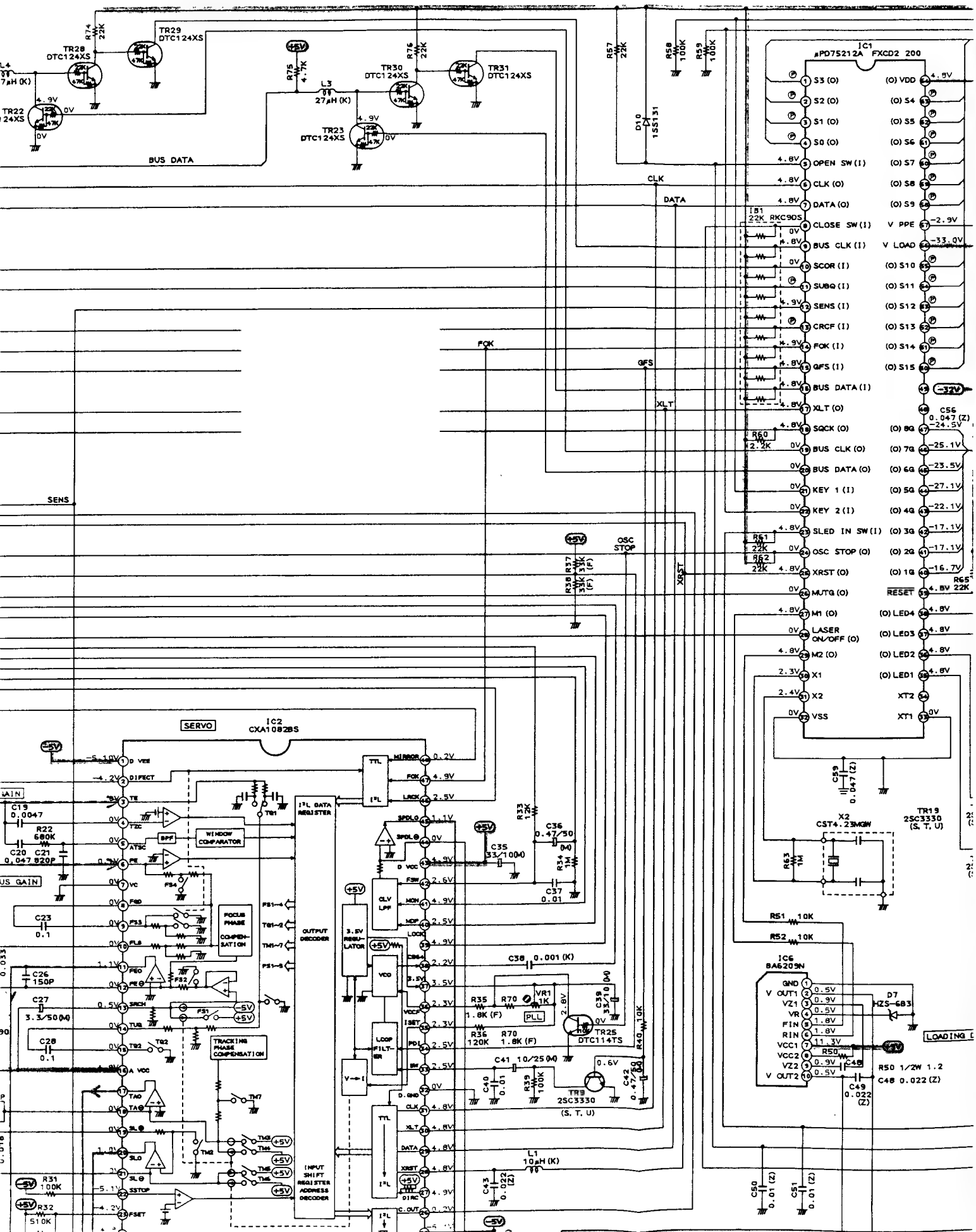
TR28 DTC124XS
TR29 DTC124XS
TR30 DTC124XS
TR31 DTC124XS
TR22 DTC124XS
TR23 DTC124XS
BUS DATA
CLK
DATA
FOK
GFS
XLT
SENS
OSC STOP
XRST
IC1 μPD75212A FXCD2 200
S3 (O)
S2 (O)
S1 (O)
S0 (O)
OPEN SW (I)
CLK (O)
DATA (O)
CLOSE SW (I)
BUS CLK (I)
SCOR (I)
SUBQ (I)
SENS (I)
CRCF (I)
FOK (I)
GFS (I)
BUS DATA (I)
XLT (O)
SQCK (O)
BUS CLK (O)
BUS DATA (O)
KEY 1 (I)
KEY 2 (I)
SLED IN SW (I)
OSC STOP (O)
XRST (O)
MUTE (O)
M1 (O)
LASER ON/OFF (O)
M2 (O)
X1
X2
VSS
VDD
S4
S5
S6
S7
S8
S9
V PPE
V LOAD
S10
S11
S12
S13
S14
S15
8Q
7Q
6Q
5Q
4Q
3Q
2Q
1Q
RESET
LED4
LED3
LED2
LED1
XT2
XT1
SERVO
IC2 CXA1082BS
TR19 2SC3330 (S, T, U)
X2 CST4.23MGW
IC6 BA6209N
TR25 DTC114TS
TR9 2SC3330 (S, T, U)
D7 HZS-6B3
LOADING
L1 10μH (K)
L3 27μH (K)

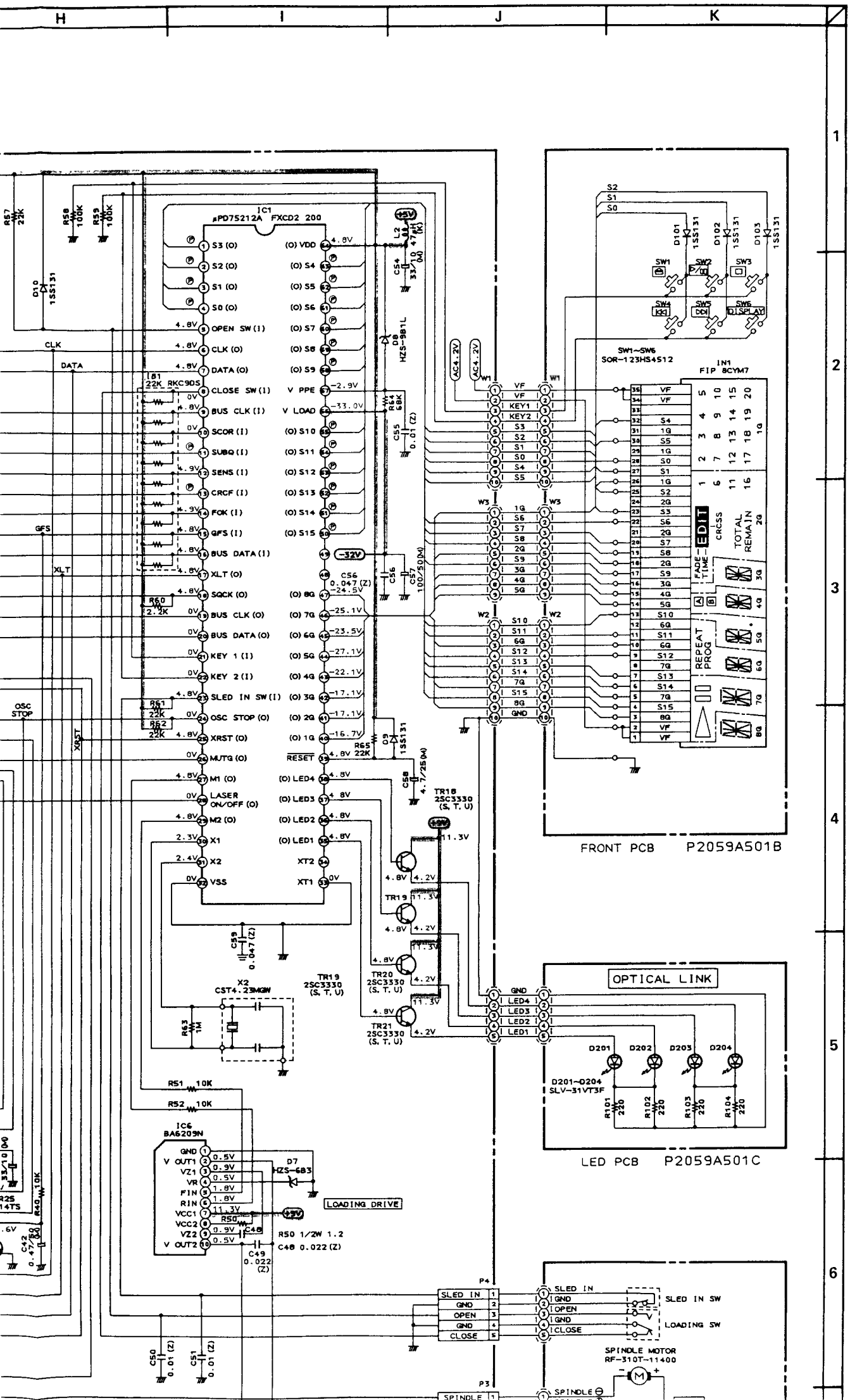
H
I
J
K
1
2
3
4
5
6
IC1
μPD75212A FXCD2 200
S3 (O)
S2 (O)
S1 (O)
S0 (O)
OPEN SW (I)
CLK (O)
DATA (O)
CLOSE SW (I)
BUS CLK (I)
SCOR (I)
SUBQ (I)
SENS (I)
CRCF (I)
FOK (I)
GFS (I)
BUS DATA (I)
XLT (O)
SQCK (O)
BUS CLK (O)
BUS DATA (O)
KEY 1 (I)
KEY 2 (I)
SLED IN SW (I)
OSC STOP (O)
XRST (O)
MUTE (O)
M1 (O)
LASER ON/OFF (O)
M2 (O)
X1
X2
VSS
(O) VDD
(O) S4
(O) S5
(O) S6
(O) S7
(O) S8
(O) S9
V PPE
V LOAD
(O) S10
(O) S11
(O) S12
(O) S13
(O) S14
(O) S15
-32V
(O) 8G
(O) 7G
(O) 6G
(O) 5G
(O) 4G
(O) 3G
(O) 2G
(O) 1G
RESET
(O) LED4
(O) LED3
(O) LED2
(O) LED1
XT2
XT1
CLK
DATA
GFS
XLT
OSC STOP
XRST
SW1~SW6
SOR-123HS4512
IN1
FIP 8CYM7
FRONT PCB P2059A501B
OPTICAL LINK
GND
LED4
LED3
LED2
LED1
D201
D202
D203
D204
D201~D204
SLV-31VT3F
LED PCB P2059A501C
TR18
2SC3330
(S, T, U)
TR19
2SC3330
(S, T, U)
TR20
2SC3330
(S, T, U)
TR21
2SC3330
(S, T, U)
X2
CST4.23MGW
IC6
BA6209N
D7
HZS-683
LOADING DRIVE
R50 1/2W 1.2
C48 0.022 (Z)
C49
0.022
(Z)
P4
SLED IN
GND
OPEN
GND
CLOSE
SLED IN SW
LOADING SW
SPINDLE MOTOR
RF-310T-11400
P3
SPINDLE

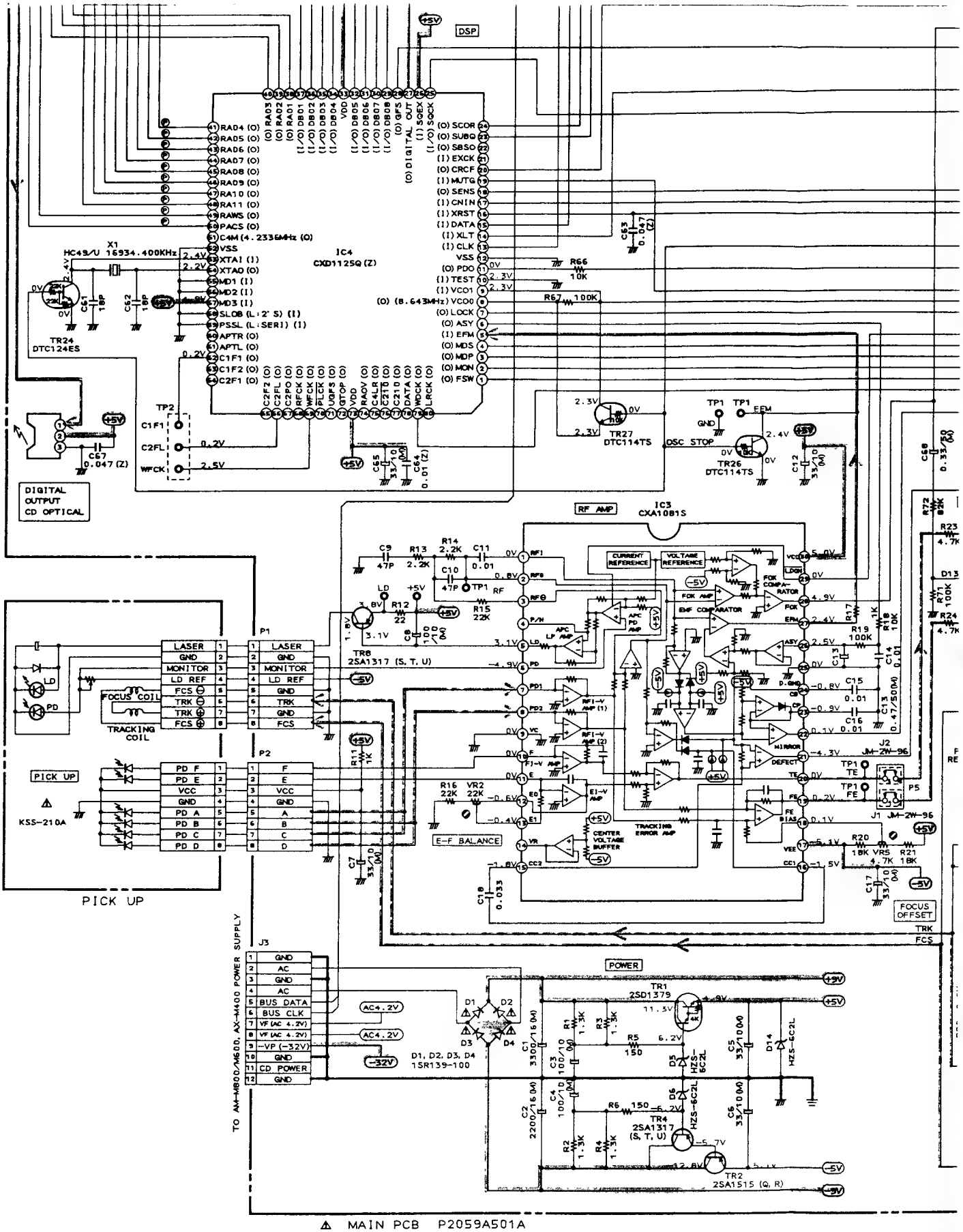
DSP
IC4
CXD1125Q (Z)
X1
HC49/U 16934.400KHz
TR24
DTC124ES
TP2
C1F1
C2FL
WFCK
DIGITAL
OUTPUT
CD OPTICAL
TR27
DTC114TS
TR26
DTC114TS
OSC STOP
RF AMP
IC3
CXA1081S
CURRENT REFERENCE
VOLTAGE REFERENCE
FOK COMPARATOR
EMF COMPARATOR
APC LP AMP
APC PD AMP
TR8
2SA1317 (S, T, U)
P1
LASER
GND
MONITOR
LD REF
FCS
TRK
FOCUS COIL
TRACKING COIL
PICK UP
KSS-210A
P2
PD F
PD E
VCC
PD A
PD B
PD C
PD D
E-F BALANCE
CENTER VOLTAGE BUFFER
TRACKING ERROR AMP
J2
JM-2W-96
J1
JM-2W-96
P5
FOCUS OFFSET
TRK
FCS
J3
GND
AC
BUS DATA
BUS CLK
VF (AC 4.2V)
-VP (-32V)
CD POWER
TO AM-M800/M600, AX-M400 POWER SUPPLY
D1, D2, D3, D4
1SR139-100
POWER
TR1
2SD1379
TR4
2SA1317
(S, T, U)
TR2
2SA1515 (Q, R)
MAIN PCB P2059A501A

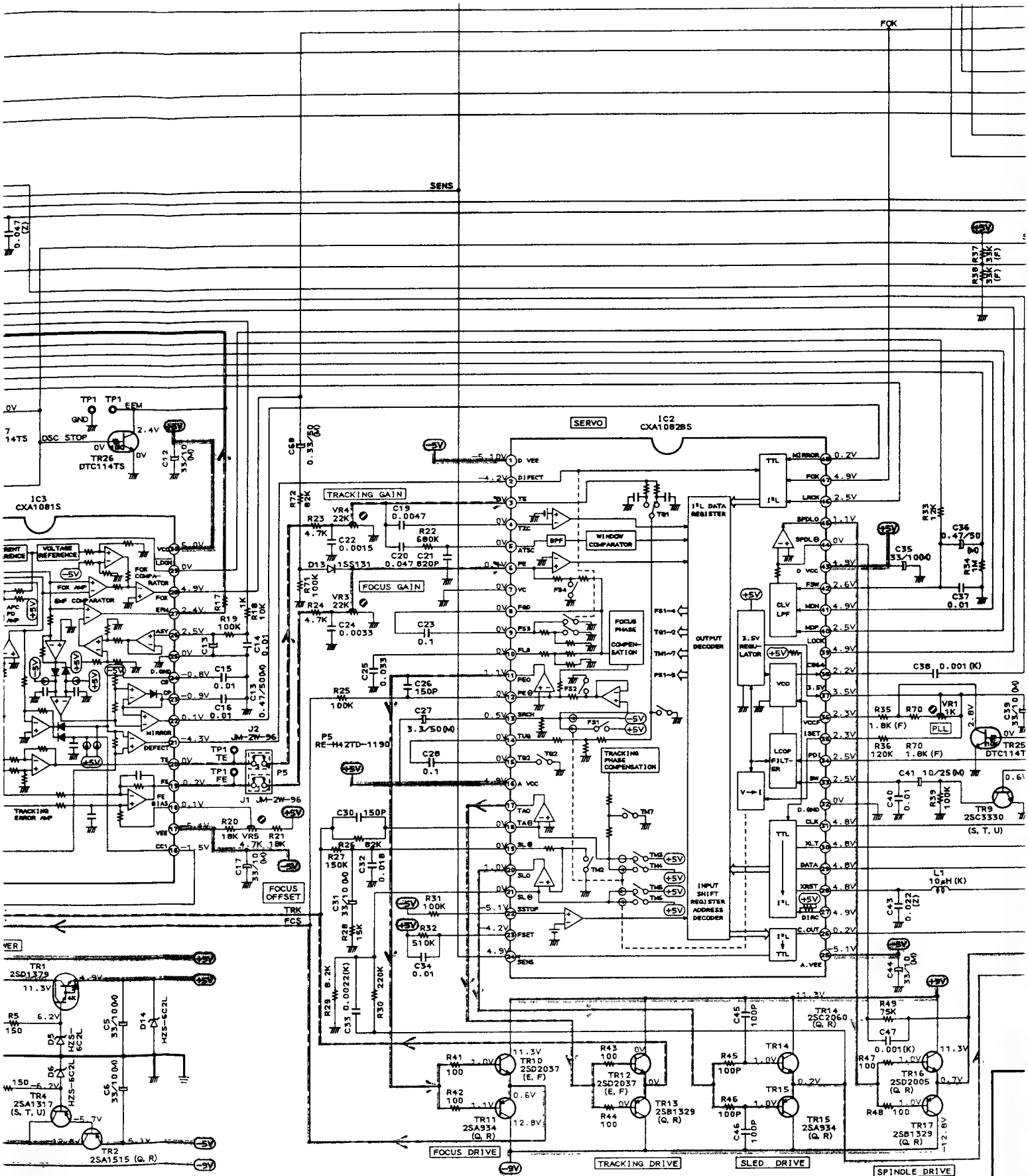
FOK
SENS
SERVO
IC2
CXA1082BS
IC3
CXA1081S
TRACKING GAIN
FOCUS GAIN
FOCUS OFFSET
TRK
FCS
TP1 TE
TP1 FE
P5
RE-H42TD-1190
J1 JM-2W-96
J2 JM-2W-96
TR26
DTC114TS
TR1
2SD1379
TR2
2SA1515 (Q, R)
TR4
2SA1317
(S, T, U)
TR10
2SD2037
(E, F)
TR11
2SA934
(Q, R)
TR12
2SD2037
(E, F)
TR13
2SB1329
(Q, R)
TR14
2SC2060
(Q, R)
TR15
2SA934
(Q, R)
TR16
2SD2005
(Q, R)
TR17
2SB1329
(Q, R)
TR25
DTC114T
TR9
2SC3330
(S, T, U)
FOCUS DRIVE
TRACKING DRIVE
SLED DRIVE
SPINDLE DRIVE
INDICATED VO
: B (POWER SUPPLY) LINE
: SIGNAL LINE
: FOCUS SERVO LINE
: TRACKING SERVO LINE
: SPINDLE MOTOR SERVO LINE
: SLIDE MOTOR SERVO LINE

D E F G

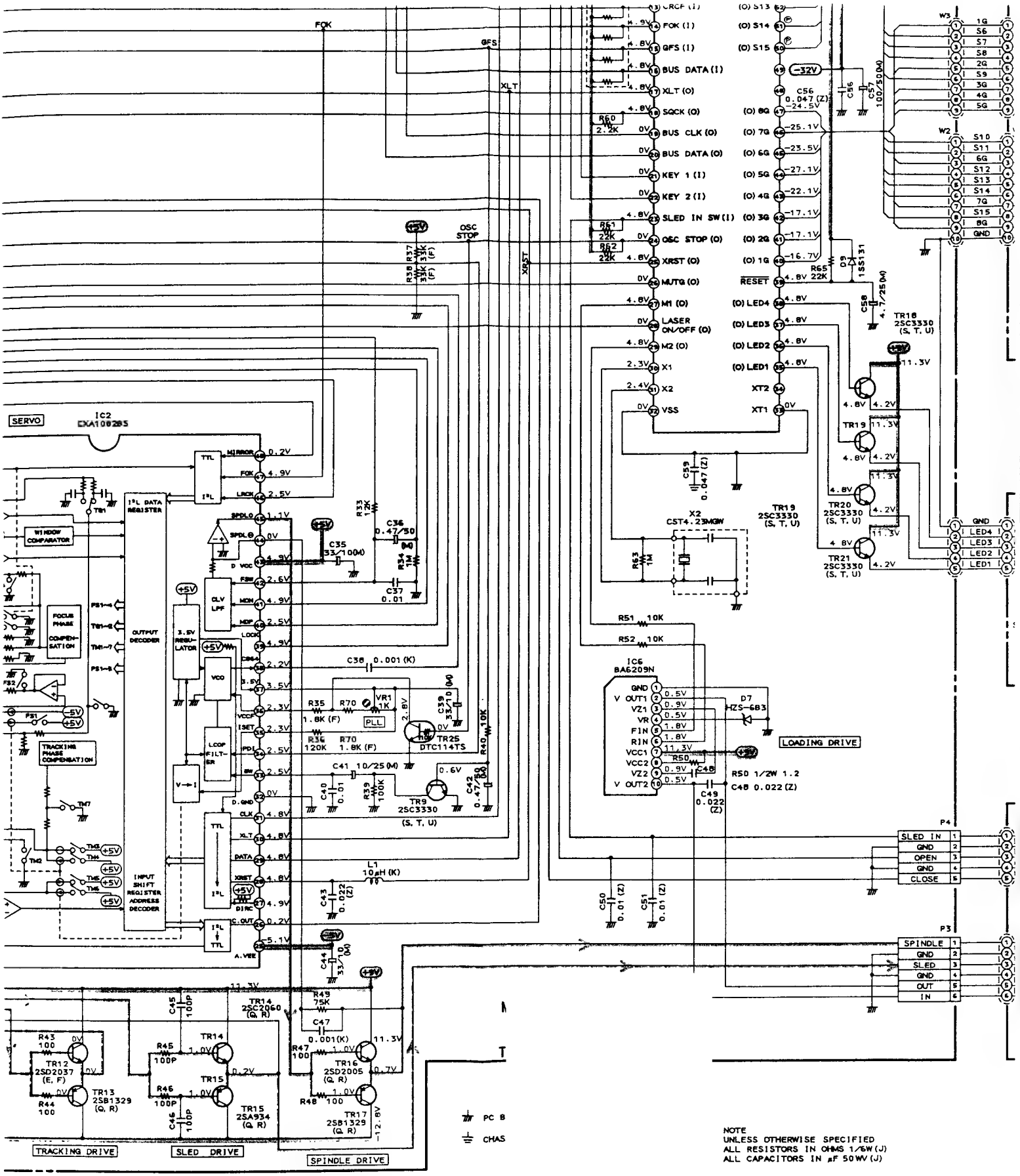

NOTE
UNLESS OTHERWISE SPECIFIED
ALL RESISTORS IN OHMS 1/6W (J)
ALL CAPACITORS IN μF 50WV (J)

INDICATED VOLTAGES ARE MEASURED AT PLAY MODE.

B (POWER SUPPLY) LINE
SIGNAL LINE
FOCUS SERVO LINE
TRACKING SERVO LINE
SPINDLE MOTOR SERVO LINE
SLIDE MOTOR SERVO LINE

WARNING: ⚠ AND ▒ INDICATE SAFETY CRITICAL COMPONENTS FOR CONTINUED SAFETY, REPLACE SAFETY CRITICAL COMPONENTS ONLY WITH MANUFACTURER'S RECOMMENDED PARTS

AVERTISSMENT: ⚠ ET ▒. ILS INDIQUENT LES COMPOSTANTS CRITIQUES DE SÉCURITÉ. POUR MAINTENIR LE DEGRÉ DE SÉCURITÉ DE L'APPAREIL, NE REMPLACER QUE DES PIÈCES RECOMMANDEES PAR LE FABRICANT

CD-
SCH

F G H I J

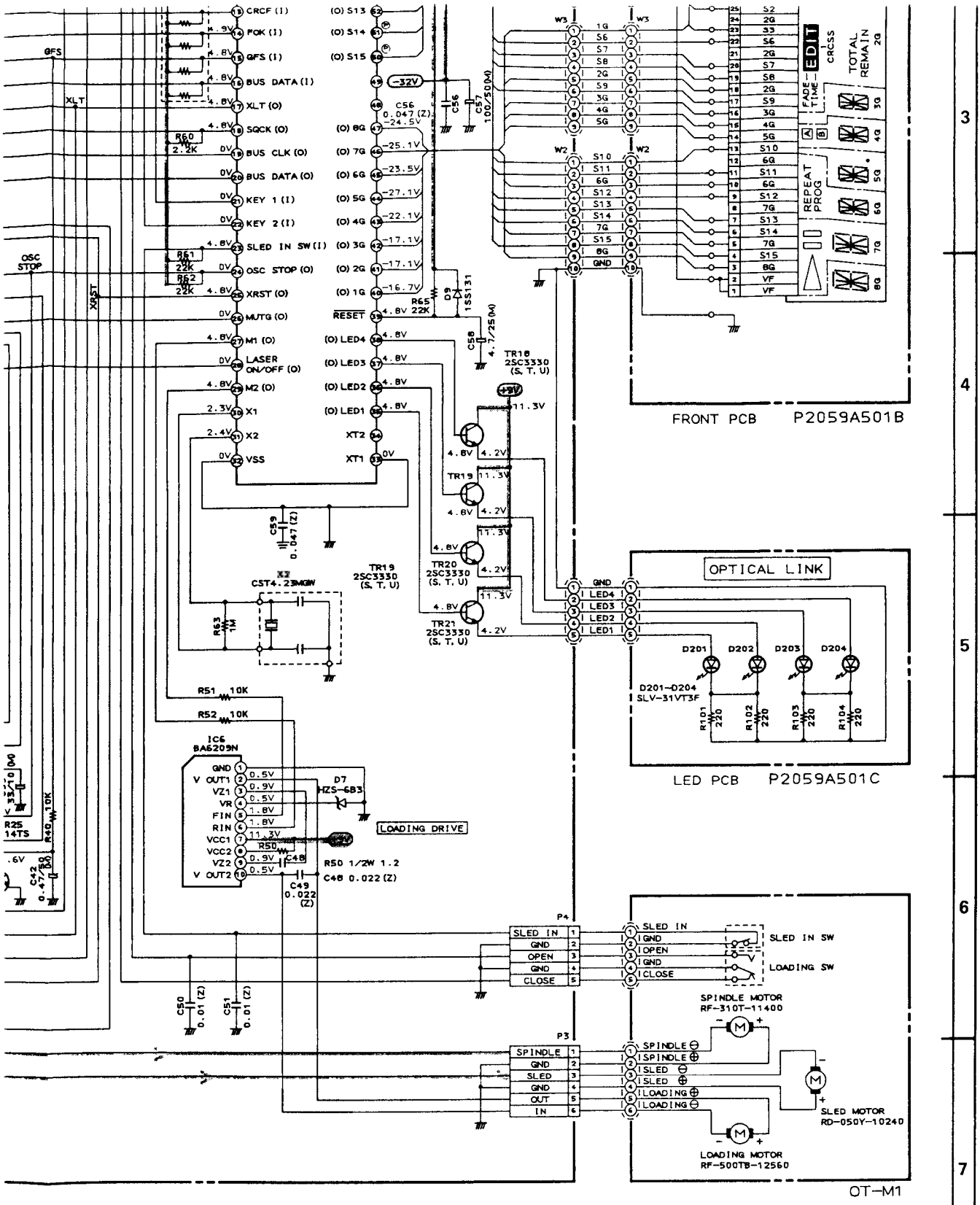

PC BOARD GND

CHASSIS GND

NOTE
UNLESS OTHERWISE SPECIFIED
ALL RESISTORS IN OHMS 1/6W (J)
ALL CAPACITORS IN μF 50WV (J)

VOLTAGES ARE MEASURED AT PLAY MODE.

WARNING: ⚠ AND ▩ INDICATE SAFETY CRITICAL COMPONENTS FOR CONTINUED SAFETY, REPLACE SAFETY CRITICAL COMPONENTS ONLY WITH MANUFACTURER'S RECOMMENDED PARTS

AVERTISSMENT: ⚠ ET ▩, ILS INDIQUENT LES COMPOSTANTS CRITIQUES DE SÉCURITÉ. POUR MAINTENIR LE DEGRÉ DE SÉCURITÉ DE L'APPAREIL, NE REMPLACER QUE DES PIÈCES RECOMMANDEES PAR LE FABRICANT

CD-M600
SCHEMATIC DIAGRAM
NO.P205901M

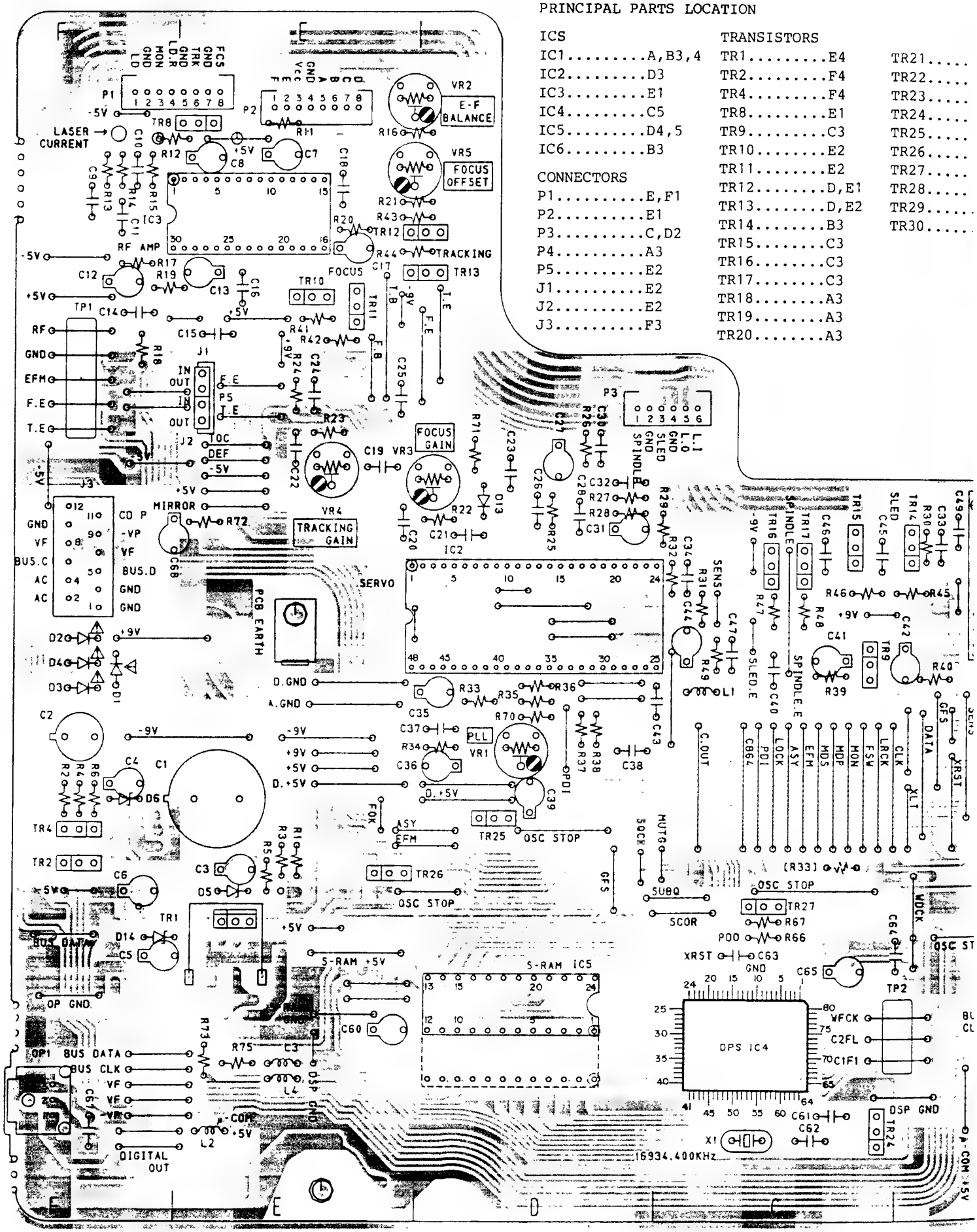

PRINCIPAL PARTS LOCATION

ICS

IC1.....A,B3,4
IC2.....D3
IC3.....E1
IC4.....C5
IC5.....D4,5
IC6.....B3

CONNECTORS

P1.....E,F1
P2.....E1
P3.....C,D2
P4.....A3
P5.....E2
J1.....E2
J2.....E2
J3.....F3

TRANSISTORS

TR1.....E4
TR2.....F4
TR4.....F4
TR8.....E1
TR9.....C3
TR10.....E2
TR11.....E2
TR12.....D,E1
TR13.....D,E2
TR14.....B3
TR15.....C3
TR16.....C3
TR17.....C3
TR18.....A3
TR19.....A3
TR20.....A3
TR21.....
TR22.....
TR23.....
TR24.....
TR25.....
TR26.....
TR27.....
TR28.....
TR29.....
TR30.....

MAIN PCB P2059A501A

PRINCIPAL PARTS LOCATION

ICS

IC1.....A,B3,4
IC2.....D3
IC3.....E1
IC4.....C5
IC5.....D4,5
IC6.....B3

CONNECTORS

P1.....E,F1
P2.....E1
P3.....C,D2
P4.....A3
P5.....E2
J1.....E2
J2.....E2
J3.....F3

TRANSISTORS

TR1.....E4
TR2.....F4
TR4.....F4
TR8.....E1
TR9.....C3
TR10.....E2
TR11.....E2
TR12.....D,E1
TR13.....D,E2
TR14.....B3
TR15.....C3
TR16.....C3
TR17.....C3
TR18.....A3
TR19.....A3
TR20.....A3
TR21.....A3
TR22.....B5
TR23.....B4
TR24.....C5
TR25.....D4
TR26.....E4
TR27.....C4
TR28.....B5
TR29.....B5
TR30.....B5

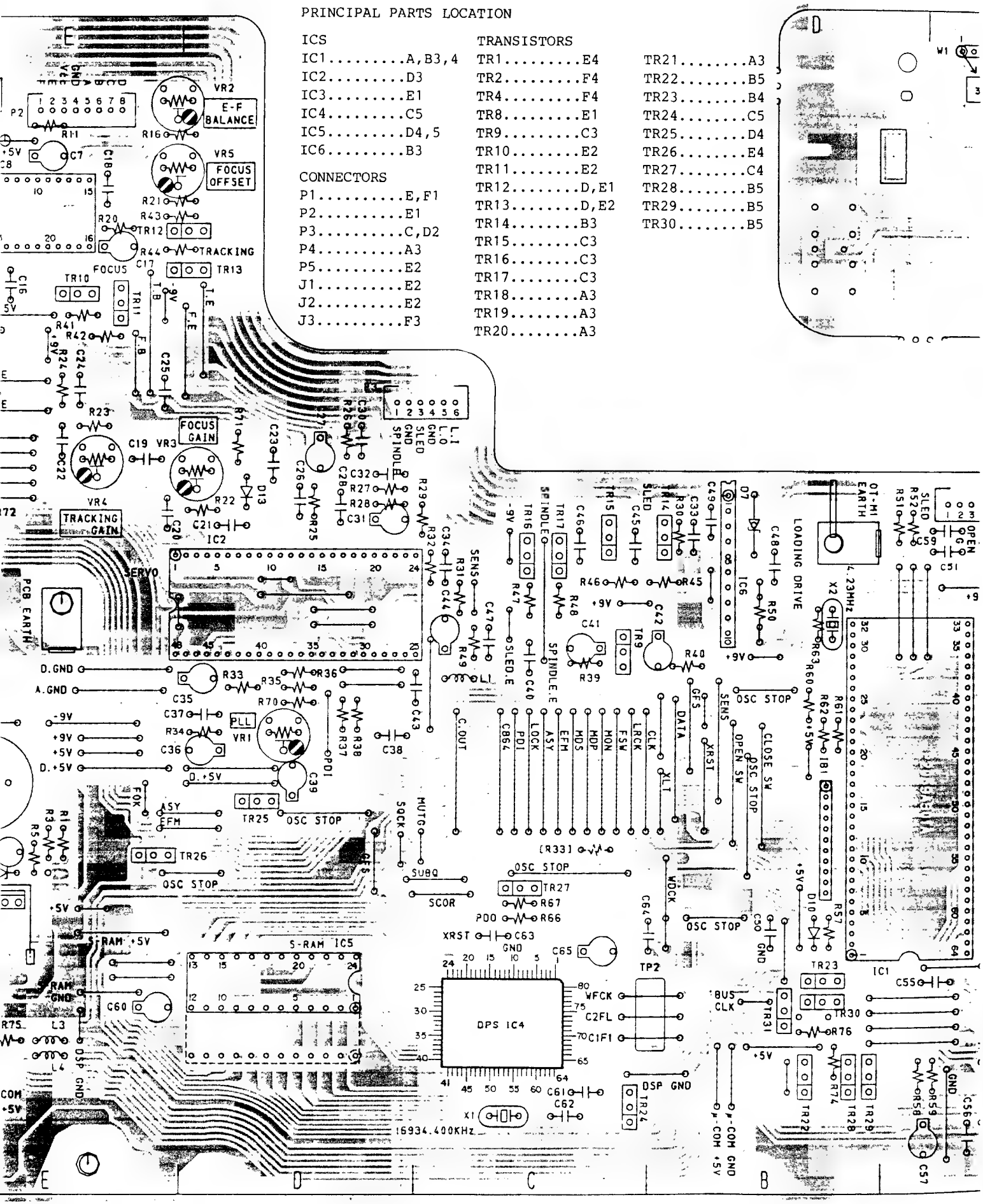

MAIN PCB P2059A501A

.E4	TR21	.A3
.F4	TR22	.B5
.F4	TR23	.B4
.E1	TR24	.C5
.C3	TR25	.D4
.E2	TR26	.E4
.E2	TR27	.C4
.D,E1	TR28	.B5
.D,E2	TR29	.B5
.B3	TR30	.B5
.C3		
.C3		
.C3		
.A3		
.A3		
.A3		

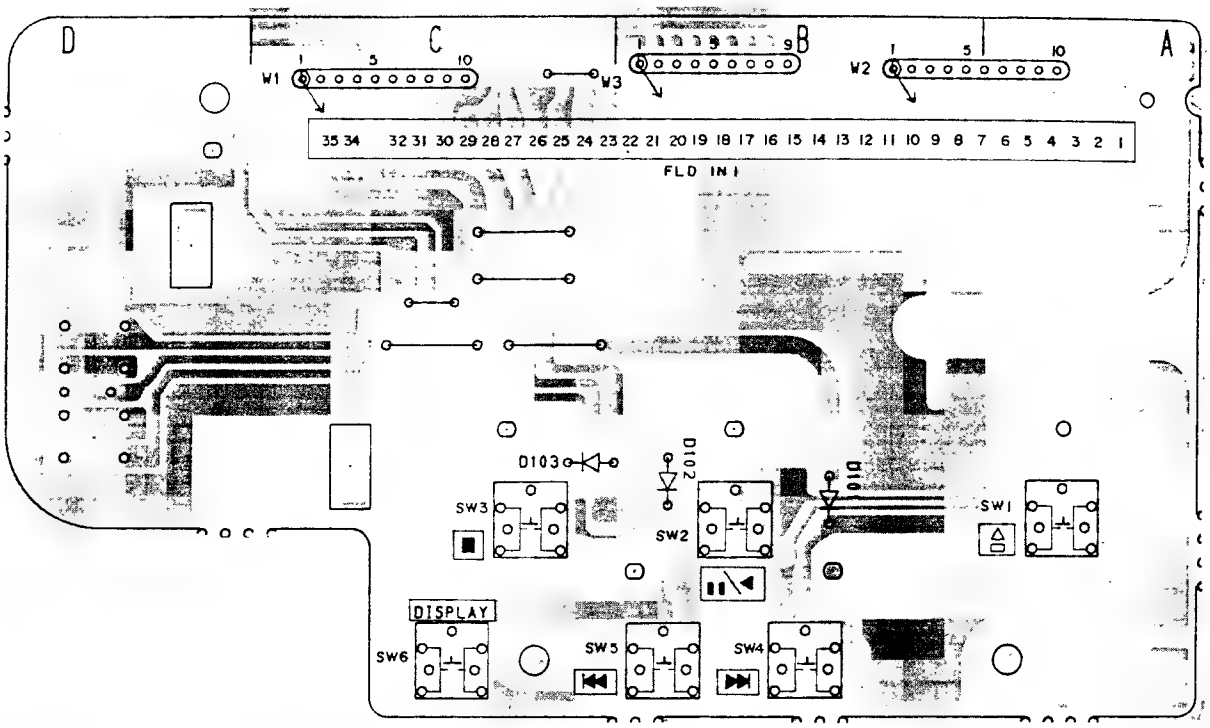

FRONT PCB P2059A501B

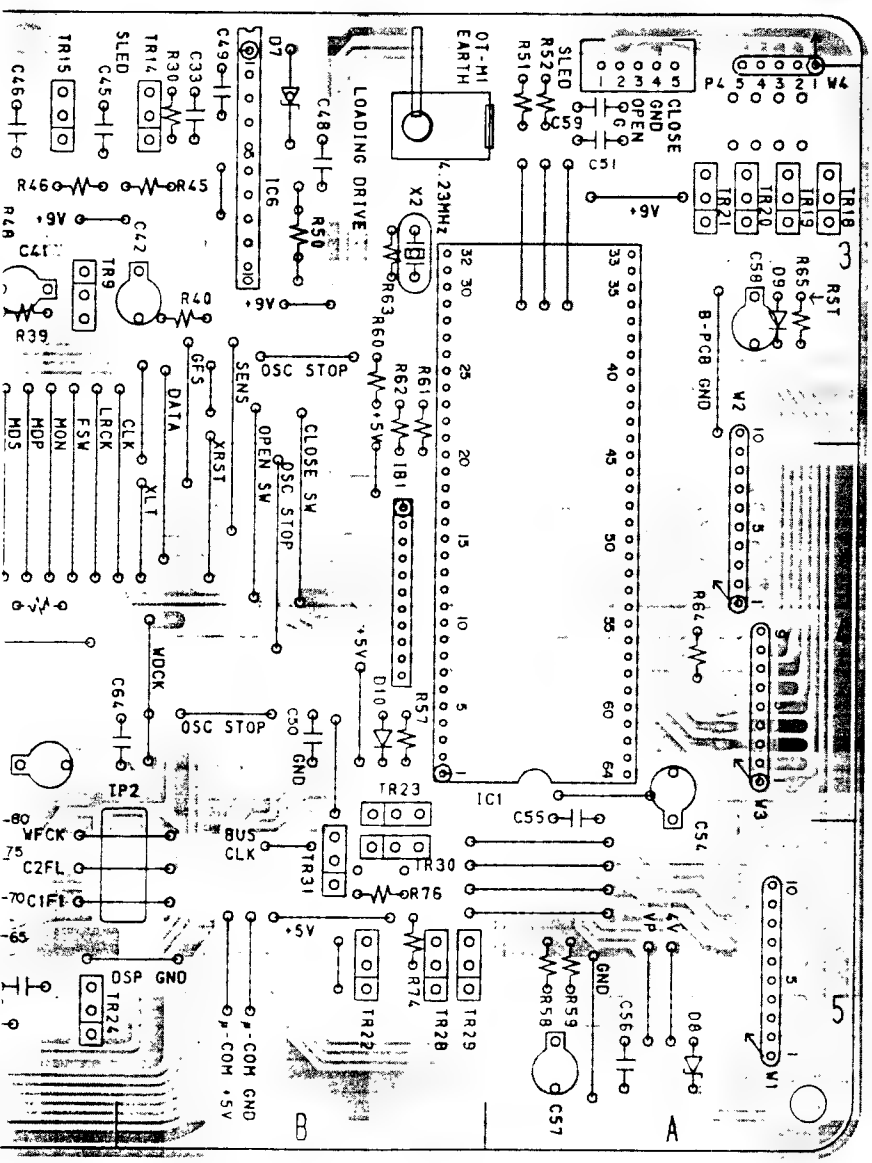

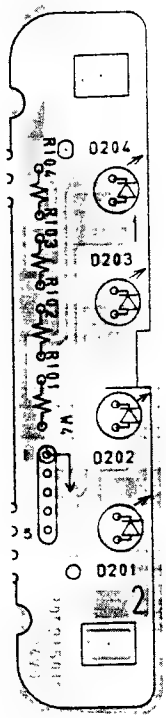

LED PCB
P2059A501C

WARNING: ⚠ INDICATES SAFETY CRITICAL COMPONENTS FOR CONTINUED SAFETY, REPLACE SAFETY CRITICAL COMPONENTS ONLY WITH MANUFACTURER'S RECOMMENDED PARTS

AVERTISSEMENT: ⚠ IL INDIQUE LES COMPOSANTS CRITIQUES DE SÉCURITÉ. POUR MAINTENIR LE DEGRÉ DE SÉCURITÉ DE L'APPAREIL, NE REMPLACER QUE DES PIÈCES RECOMMANDÉES PAR LE FABRICANT

CXA1081 (RF AMPLIFIER)

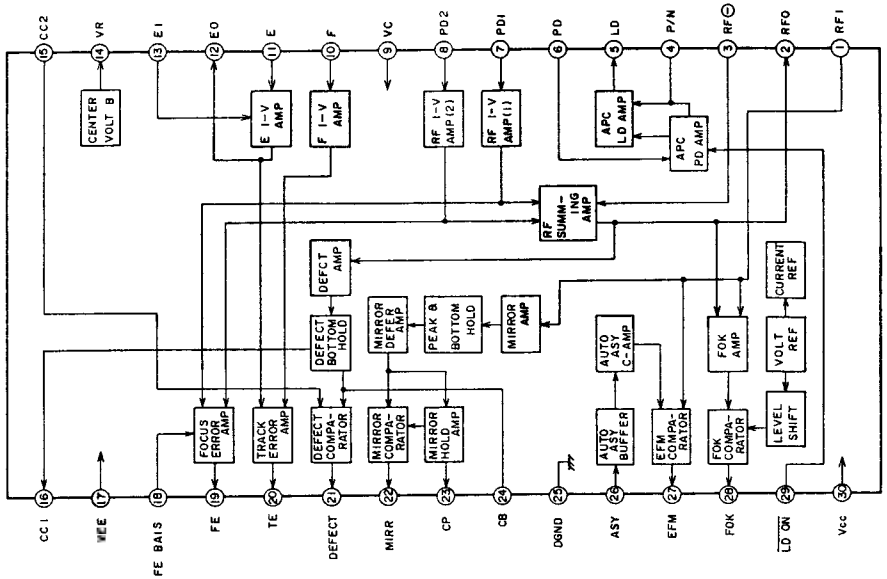

CXA1081 (RF AMPLIFIER)

PIN NO.	SYMBOL	I/O	FUNCTION
1	RFI	I	RF SIGNAL FROM SUMMING AMP
2	RF0	O	RF SIGNAL OUT (EYE PATTERN CHECK POINT)
3	RF⊖	I	FEED BACK TO SUMMING AMP
4	P/N	—	NC
5	LD	O	AUTO POWER CONTROL OUT (TO LASER DIODE)
6	PD	I	AUTO POWER CONTROL IN (FROM PILOT DIODE)
7	PD1	I	A+C SIGNAL RF I-V AMP IN
8	PD2	I	B+D SIGNAL RF I-V AMP IN
9	VC	—	GND
10	F	I	TRACKING DIODE SIGNAL RF I-V AMP IN (F)
11	E	I	TRACKING DIODE SIGNAL RF I-V AMP IN (E)
12	E0	O	RF I-V AMP (E) OUT
13	EI	I	FEED BACK TO RF I-V AMP (E)
14	VR	—	NC
15	CC2	I	DEFECT BOTTOM HOLD IN
16	CC1	O	DEFECT BOTTOM HOLD OUT
17	VEE	—	−B
18	F·EBIAS	I	FOCUS OFF-SET VOLTAGE IN
19	FE	O	FOCUS ERROR OUT
20	TE	O	TRACKING ERROR OUT
21	DEFECT	O	DEFECT COMPALATOR OUT
22	MIRR	O	MIRROR COMPALATOR OUT
23	CP	I	CONNECT MIRROR HOLD CONDENSER
24	CB	I	CONNECT BOTTOM HOLD CONDENSER
25	DGND	—	GND
26	ASY	I	AUTO ASYMMETRY SIGNAL IN
27	EFM	O	EFM COMPALATOR OUT
28	FOK	O	FOCUS OK COMPALATOR OUT
29	LDON	I	LASER DIODE ON/OFF CONTROL IN
30	VCC	—	+B

CXA1082BS (SERVO SIGNAL PROCCESOR)

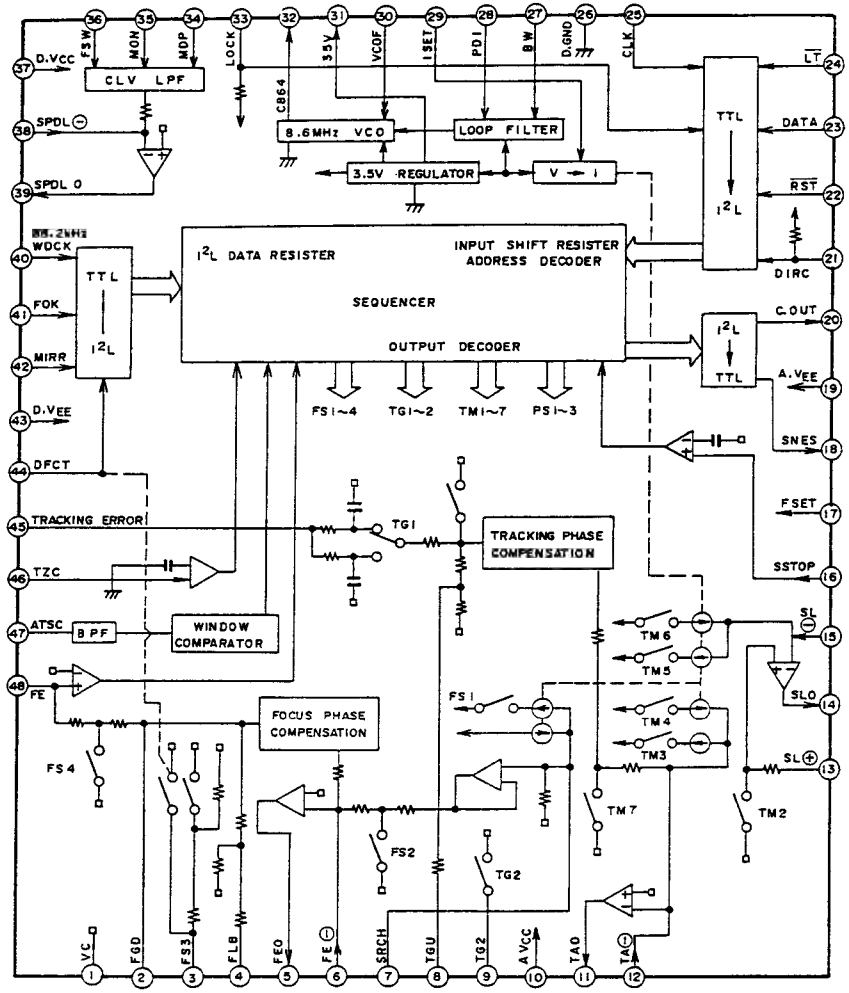

CXA1082BS (SERVO SIGNAL PROCCESOR)

PIN NO.	SYMBOL	I/O	DESCRIPTION
1	VC	—	GND (0V)
2	FGD	—	Connect condenser for Focus servo gain control.
3	FS3	—	Focus servo gain select.
4	FLB	—	Connect condenser for Focus servo correction.
5	FE0	O	Focus drive output.
6	FE ⊖	I	FOCUS AMP. Inverting input.
7	SRCH	—	Connect condenser for Focus search wave.
8	TGU	—	Connect condenser for Tracking gain select.
9	TG2	—	Connect condenser for Tracking gain select.

PIN NO.	SYMBOL	I/O	DESCRIPTION
10	A.VCC	——	+5V
11	TA0	O	Tracking drive output.
12	TA ⊖	I	Tracking AMP. Inverting input.
13	SL ⊕	I	Slide motor non-inverting input
14	SLO	O	Slide motor drive output.
15	SL ⊖	I	Slide AMP. inverting input.
16	SSTOP	I	Not use (Holded "H" level).
17	FSET	I	Focus, Tracking compensation and CLV. LPF set up.
18	SENS	O	FZC. AS. TZC. SSTOP and $\overline{\text{BUSY}}$ output.
19	A. VEE	——	−5V.
20	C.OUT	O	Track count signal output.
21	DIRC	——	Not used
22	$\overline{\text{RST}}$	I	$\overline{\text{RESET}}$ Input.
23	DATA	I	Data signal input from CPU.
24	$\overline{\text{LT}}$	I	Lutch signal input from CPU.
25	CLK	I	Clock signal input from CPU.
26	D.GND	——	GND (0V).
27	BW	I	Connect condenser for Loop filter.
28	PDI	I	PDO signal from IC3 CXD1135Q (Pin 11).
29	ISET	I	Focus search, Track jump and slide kick current input.
30	VCOF	I	Connect register for VCO frequency.
31	3.5V	O	+3.5V REG. output.
32	C864	O	8.64 MHz VCO output.
33	LOCK	I	LOCK signal from IC3 CXD1135Q (Pin 7)
34	MDP	I	MDP signal from IC3 CXD1135Q (Pin 3)
35	MON	I	MON signal from IC3 CXD1135Q (Pin 2)
36	FSW	I	Connect condenser for CLV servo error signal LPF.
37	DVcc	——	+5V
38	SPDL ⊖	I	Spindle drive AMP. inverting input.
39	SPDLO	I	Spindle drive output.
40	WDCK	I	Auto sequence clock signal input (88.2 kHz)
41	FOK	I	Focus OK signal input.
42	MIRR	I	MIRR signal input.
43	DVEE	——	−5V
44	DFCT	I	Defect signal input "H" active.
45	TE	I	Tracking error signal input.
46	TZC	I	Tracking zero cross comparator input.
47	ATSC	I	ATSC detect window comparator input.
48	FE	I	Focus error signal input.

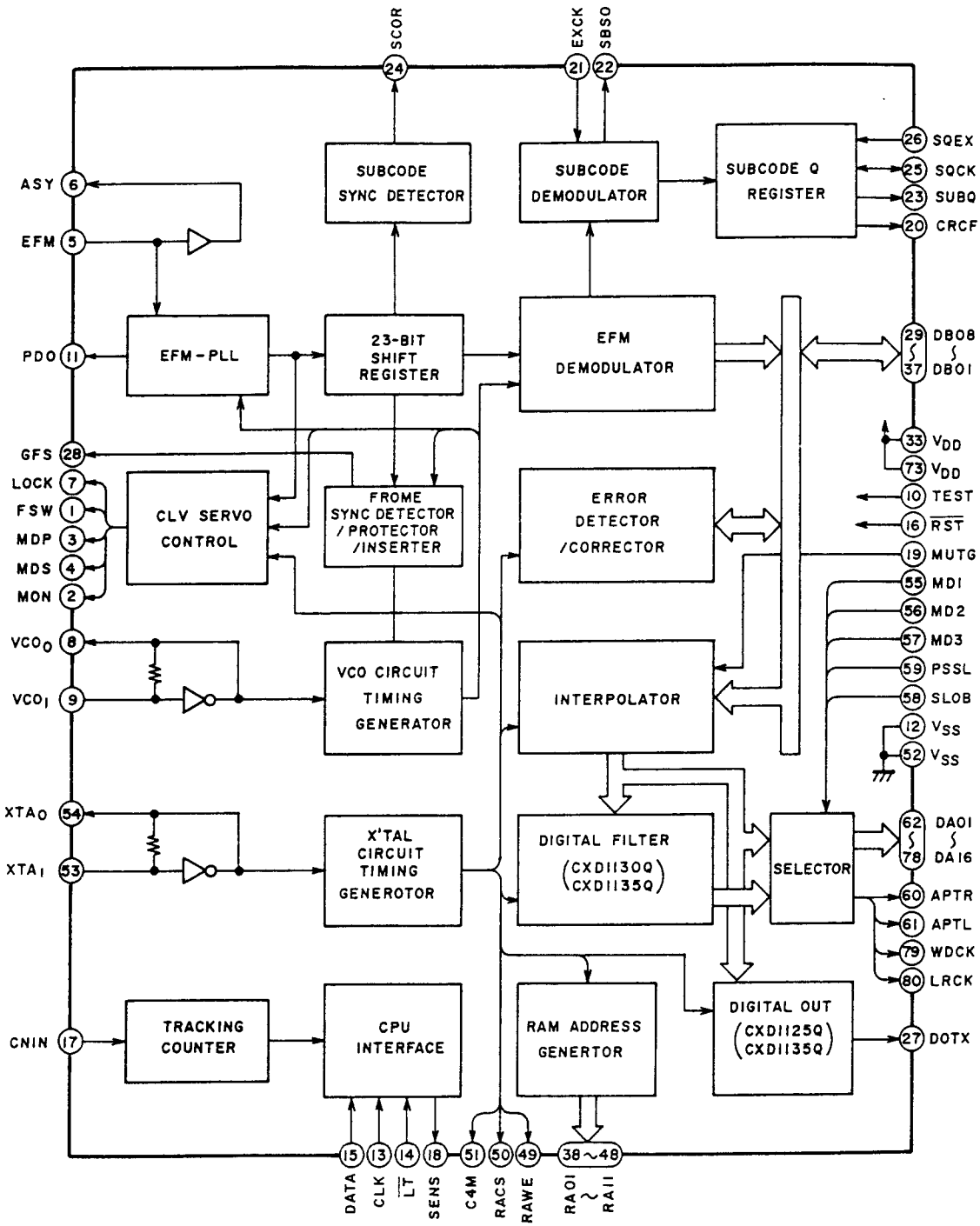
SCOR
EXCK
SBSO
SUBCODE SYNC DETECTOR
SUBCODE DEMODULATOR
SUBCODE Q REGISTER
SQEX
SQCK
SUBQ
CRCF
ASY
EFM
PDO
EFM-PLL
23-BIT SHIFT REGISTER
EFM DEMODULATOR
DB08 ~ DB01
VDD
VDD
GFS
LOCK
FSW
MDP
MDS
MON
CLV SERVO CONTROL
FROME SYNC DETECTOR / PROTECTOR /INSERTER
ERROR DETECTOR /CORRECTOR
TEST
RST
MUTG
MDI
MD2
MD3
PSSL
SLOB
VCO0
VCO1
VCO CIRCUIT TIMING GENERATOR
INTERPOLATOR
VSS
VSS
XTAO
XTAI
X'TAL CIRCUIT TIMING GENEROTOR
DIGITAL FILTER (CXD1130Q) (CXD1135Q)
SELECTOR
DAOI ~ DA16
APTR
APTL
WDCK
LRCK
CNIN
TRACKING COUNTER
CPU INTERFACE
RAM ADDRESS GENERTOR
DIGITAL OUT (CXD1125Q) (CXD1135Q)
DOTX
DATA
CLK
LT
SENS
C4M
RACS
RAWE
RAOI ~ RAII

No.	Symbol	I/O	Description
1	FSW	O	Spindle motor filter switching control
2	MON	O	Spindle motor ON/OFF control
3	MPD	O	Spindle motor speed and phase control
4	MDS	O	Spindle motor speed control
5	EFM	I	EFM signal input
6	ASY	O	EFM signal slice level control
7	LOCK	O	Slide motor over reach guard signal output
8	VCOO	O	VCO output f=8.6436 MHz
9	VCOI	I	VCO input
10	TEST	I	OV (GND)
11	PDO	O	Phase comp.output
12	VSS	—	GND (OV)
13	CLK	I	Clock signal from CPU
14	$\overline{LT}$	I	Lutch signal from CPU
15	DATA	I	Serial data from CPU
16	$\overline{RST}$	I	RESET input "L" reset
17	CNIN	I	Tracking pulse input (5V)
18	SENS	O	Output of CPU interface
19	MUTG	I	Mute control signal input
20	CRCF	O	CRC check output of the subcode Q "L" detect error
21	EXCK	I	NOT USE
22	SBSO	O	NOT USE
23	SUBQ	O	Subcode Q output
24	SCOR	O	Subcode sync detection output
25	SQCK	I/O	Clock signal for subcode Q
26	SQEX	I	Select input of CQCK (+5V)
27	DOTX	O	Digital output
28	GFS	O	"H" frame sync lock "L" frame sync unlock
29	DB08	I/O	Data 8 (MSB) Data Bus line for the EXT.RAM (LC3517BS-15)
30	DB07	I/O	Data 7 Data bus line for the EXT.RAM (LC3517BS-15)
31	DB06	I/O	Data 6 Data Bus line for the EXT.RAM (LC3517BS-15)
32	DB05	I/O	Data 5 Data Bus line for the EXT.RAM (LC3517BS-15)
33	VDD	—	+5V
34	DB04	I/O	Data 4 Data Bus line for the EXT.RAM (LC3517BS-15)
35	DB03	I/O	Data 3 Data Bus line for the EXT.RAM (LC3517BS-15)
36	DB02	I/O	Data 2 Data Bus line for the EXT.RAM (LC3517BS-15)
37	DB01	I/O	Data 1 (LSB) Data Bus line for the EXT.RAM (LC3517BS-15)
38	RA01	O	ADDR01 (LSB) Address signal output for the EXT. RAM (LC3517BS-15)
39	RA02	O	ADDR02 Address signal output for the EXT. RAM (LC3517BS-15)
40	RA03	O	ADDR03 Address signal output for the EXT. RAM (LC3517BS-15)

No.	Symbol	I/O	Description
41	RA04	O	ADDR04 Address signal output for the EXT. RAM (LC3517BS-15)
42	RA05	O	ADDR05 Address signal output for the EXT. RAM (LC3517BS-15)
43	RA06	O	ADDR06 Address signal output for the EXT. RAM (LC3517BS-15)
44	RA07	O	ADDR07 Address signal output for the EXT. RAM (LC3517BS-15)
45	RA08	O	ADDR08 Address signal output for the EXT. RAM (LC3517BS-15)
46	RA09	O	ADDR09 Address signal output for the EXT. RAM (LC3517BS-15)
47	RA10	O	ADDR10 Address signal output for the EXT. RAM (LC3517BS-15)
48	RA11	O	ADDR11 (MSB) Address signal output for the EXT. RAM (LC3517BS-15)
49	RAWE	O	Write enable signal output "L" active
50	RACS	O	Chip select signal output "L" active
51	C4M	O	1/4X'tal OSC.output (f=4.2336MHz)
52	Vss	—	GND(0V)
53	XTAI	I	X'tal OSC. input (f=16.9344MHz)
54	XTAO	O	X'tal OSC.output (f=16.9344MHz)
55	MD1	I	Mode select input 1 0V (GND)
56	MD2	I	Mode select input 2 0V (GND)
57	MD3	I	Mode select input 3 0V (GND)
58	SLOB	I	0V (GND)
59	PSSL	I	0V (GND)
60	APTR	O	Aperture correction signal output "H" R-channel
61	APTL	O	Aperture correction signal output "H" L-channel
62	C1F1	O	NOT USE
63	C1F2	O	TP-C1F2
64	C2F1	O	NOT USE
65	C2F2	O	NOT USE
66	C2FL	O	TP-CSFL
67	C2P0	O	NOT USE
68	RFCK	O	NOT USE
69	WFCK	O	TP-WFCK
70	$\overline{\text{PLCK}}$	O	NOT USE
71	UGFS	O	NOT USE
72	GTOP	O	NOT USE
73	VDD	—	+5V
74	RA0V	O	NOT USE
75	4CLR	O	NOT USE
76	$\overline{\text{C210}}$	O	$\overline{\text{C210}}$ INV.C210 (Pin 77) f=2.1168MHz
77	C210	O	NOT USE
78	DATA	O	Data output
79	WDCK	O	Worde clock output 88.2kHz strobe
80	LRCK	O	NOT USE (L-ch, R-ch clock output)

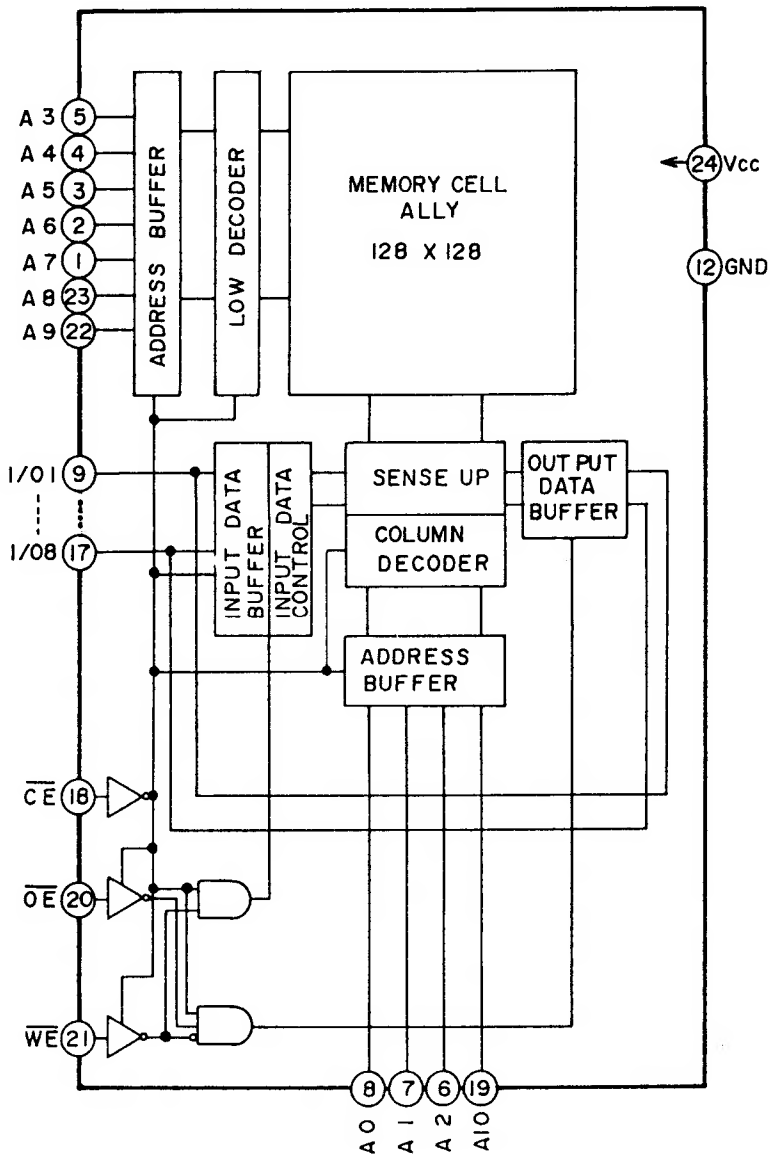

TRUTH TABLE

MODE	CE	OE	WE	I/O
READ CYCLE	L	L	H	DATA OUT
WRITE CYCLE	L	*	L	DATA IN
OUTPUT DISABLE	L	H	*	HIGH IMPEDANCE
INHIBIT	H	*	*	HIGH IMPEDANCE

Pin No.	SYMBOL	I/O	FUNCTIONS
1	S3	O	FLD segment drive output
2	S2	O	
3	S1	O	
4	S0	O	
5	OPEN SW	I	Disc tray open detection switch input
6	CLK	O	Clock output for LSIs
7	DATA	O	Searial data output for LSIs
8	CLOSE SW	I	Disc tray close detection switch input
9	BUS CLK	I	Clock input
10	SCOR	I	Sub code request input
11	SUBQ	I	Sub code-Q data input
12	SENS	I	SENS signal input from IC2
13	CRCF	I	Input of result of sub code-Q error check (CRC)
14	FOK	I	Input of focus OK signal
15	GFS	I	Input of GET FLAME SYNC signal
16	BUS DATA	I	Data input
17	XLT	O	Latch control data output
18	SQCK	O	Reading clock output for sub code-Q
19	BUS CLOCK	O	Bus clock output
20	BUS DATA	O	Bus data output
21	KEY 1	I	Key return 1
22	KEY 2	I	Key return 2
23	SLED IN SW	I	Pick up block innermost detection switch input
24	OSC STOP	O	VCO OSC stop control signal output
25	XRST	O	Reset output for LSIs. H : OSC stop
26	MUTG	O	Mute control output. H : Mute on
27	F OUT	O	Direction control output for loading motor drive IC BA6029AN
28	LASER ON/OFF	O	Laser diode on/off control output. H : Laser on
29	R OUT	O	Direction control output for loading motor drive IC BA6029AN
30	X 1	I	Main clock input
31	X 2	O	Main clock output
32	Vss		GND
33	XT 1		Not used
34	XT 2		Not used
35	LED 1	O	Optical link 1 LED control output. H : LED light
36	LED 2	O	Optical link 2 LED control output. H : LED light
37	LED 3	O	Optical link 3 LED control output. H : LED light
38	LED 4	O	Optical link 4 LED control output. H : LED light
39	RESET	I	Reset signal input
40	1G	O	
41	2G	O	
42	3G	O	FLD digit control output
43	4G	O	
44	5G	O	
45	6G	O	
46	7G	O	
47	8G	O	
48			Not used
49			Not used
50	S15	O	FLD segment control output
51	S14	O	
52	S13	O	
53	S12	O	
54	S11	O	
55	S10	O	
56	VOL AD		-30 V
57	VP PRE		- 4 V
58	S9	O	FLD segment control output
59	S8	O	
60	S7	O	
61	S6	O	
62	S5	O	
63	S4	O	
64	Vdd		+ 5 V

ABBREVIATIONS (COMPACT DISC)

ABBREVIATION	EXPLANATION	ABBREVIATION	EXPLANATION
A-D	Analog to Digital (Convertor)	Mb	Mega Bits
ADC	Analog to Digital (Convertor)	MDA	Motor Drive Amplifier
BCD	Binary Code Decimal	MFM	Modified Frequency Modulation
BPI	Bits per Inch	MM	Mono-stable Multivibrator
CD	Compact Disc	M^2FM	Modified Modified Frequency Modulation
CIRC	Cross Interleaving & Reed Solomon Coding	MOD2	Modulo 2 (Addition)
CLV	Constant Linear Velocity	MP	Microprocessor
CP	Clock Pulses	MSB	Most Significant Bit
CRCC	Cyclic Redundancy Check Codes	NA	Numerical Aperture
D Level	Decision Level	NRZ	Non Return to Zero
D-A	Digital to Analog (Convertor)	NRZ-1	Non Return to Zero Inverted
DAC	Digital to Analog (Convertor)	P	Parity Data
DAD	Digital Audio Disc	PAM	Pulse Amplitude Modulation
DEM	Dynamic Element Matching	PCM	Pulse Code Modulation
DPD	Differential Phase Detection	PD	Phase Detector
DSV	Digital Sum Value	PE	Phase Encode
EFM	Eight to fourteen Modulation	PLL	Phase Locked Loop
EX-OR	EXclusive OR	PNM	Pulse Number Modulation
FCI	Flux Changes per Inch	PPM	Pulse Phase Modulation
FIR	Finite Impulse Response	PWM	Pulse Width Modulation
FP	Front Pulse	Q	Parity Data
FPG	Front Pulse Gate	R, R_1, R_2, etc.	Data for Right Channel
f	Frequency of Sampling	RAM	Random Access Memory
GF	Galois Field	RPG	Rear Pulse Gate
H & V (Parity)	Horizontal & Vertical	SCOOP	Self Coupled Optical Pick-up
IIR	Infinite Impulse Response	S & H	Sample & Hold
kb	Kilo Bits	S/N	Signal to Noise Ratio
L, L_1, L_2, etc.	Data for Left Channel	SSG	Standard Signal Generator
LPF	Low Pass Filter	SYSCON	SYStem CONtrol
LSB	Least Significant Bit		

AKAI ELECTRIC CO., LTD.

12-14, 2-Chome, Higashi-Kojiya, Ohta-ku, Tokyo, Japan
SERVICE DEPARTMENT TEL:Tokyo (745)9884 TELEX:J26261
Printed No. 900406-A1-3200 Printed Date May 8, 1990
350 Printed in Japan